FIRATPEN

# 55 HIBRIT

## TEKNİK KATALOG

## TECHNICAL CATALOGUE

# 55 HIBRIT



01 Kasa Profilleri / Frame Profiles

02 Orta Kayıt Profilleri / Mullion Profiles

04 Kanat Profilleri / Vent Profiles

06 Etek ve Eşik Profilleri / Kick Plate And Threshold Profiles

07 Adaptör Profilleri / Adapter Profiles

09 Cam Çıta Profilleri / Glazing Bead Profiles

11 Cam Tablosu / Glass Table

12 Köşe Takoz Profilleri / Corner Cleat Profies

15 Orta Kayıt Bağlantı Profilleri / Mullion Connection Profiles

34 Montaj / Assembly

# 55 HIBRIT



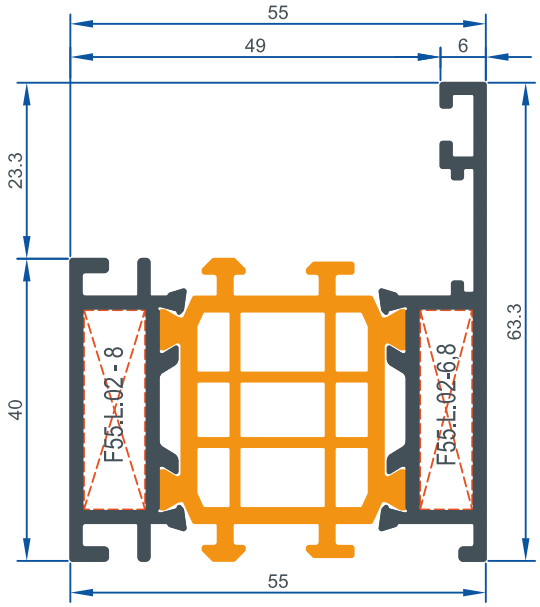


| F55.F.01 | AĞIRLIK (kg/m)<br>Weight (kg/m) | ALAŞIM<br>Alloy | |
|---|---|---|---|
| | 1,764 | EN AW 6060 T66 | |
| | **Jx** (cm⁴) | **Jy** (cm⁴) | X<br>Y — Y<br>X |
| | 20,482 | 10,966 | |

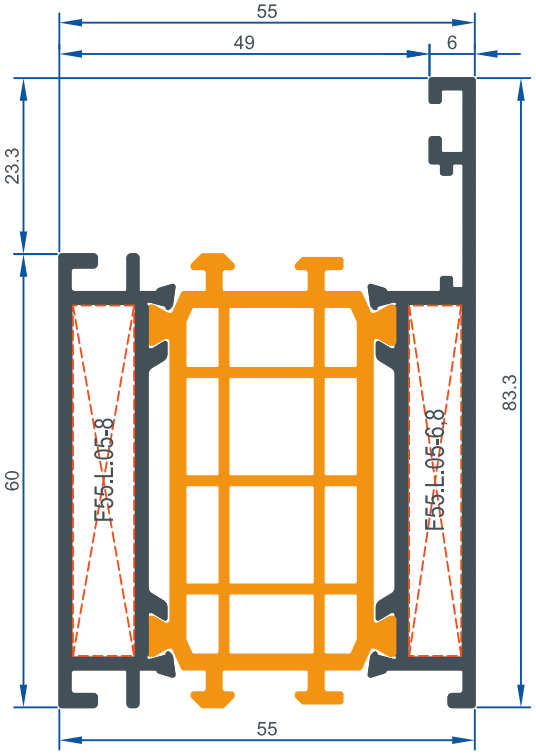


| F55.F.02 | AĞIRLIK (kg/m)<br>Weight (kg/m) | ALAŞIM<br>Alloy | |
|---|---|---|---|
| | 2,339 | EN AW 6060 T66 | |
| | **Jx** (cm⁴) | **Jy** (cm⁴) | X<br>Y — Y<br>X |
| | 26,991 | 26,834 | |

# 55 HIBRIT

## ORTA KAYIT PROFİLLERİ
## MULLION PROFILES

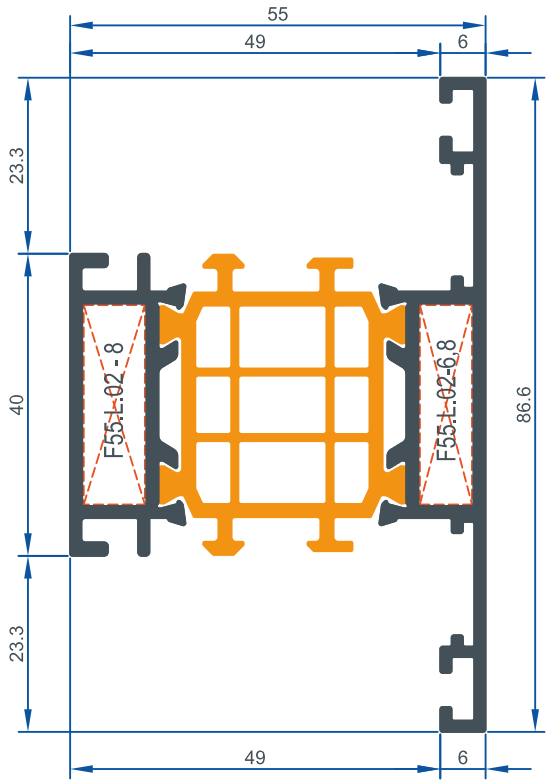


| F55.M.01 | AĞIRLIK (kg/m)<br>Weight (kg/m) | ALAŞIM<br>Alloy | |
|---|---|---|---|
| | 1,916 | EN AW 6060 T66 | |
| | **Jx** (cm⁴) | **Jy** (cm⁴) | X<br>Y — Y<br>X |
| | 23,091 | 18,373 | |

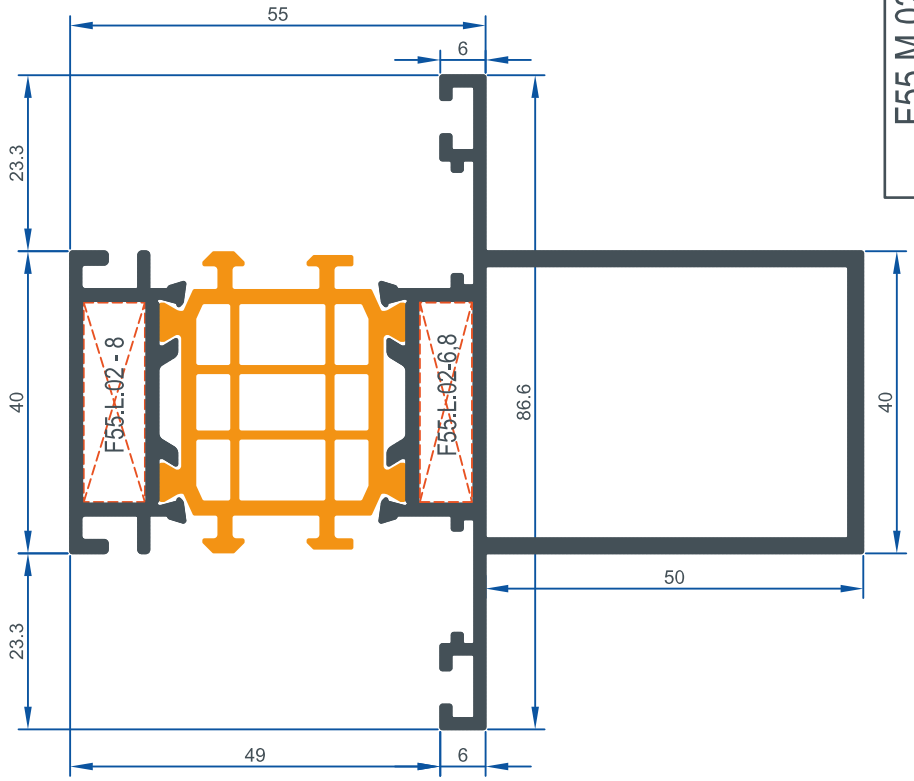


| F55.M.02 | AĞIRLIK (kg/m)<br>Weight (kg/m) | ALAŞIM<br>Alloy | |
|---|---|---|---|
| | 2,651 | EN AW 6060 T66 | |
| | **Jx** (cm⁴) | **Jy** (cm⁴) | X<br>Y — Y<br>X |
| | 79,853 | 26,380 | |

# 55 HIBRIT

## ORTA KAYIT PROFİLLERİ
MULLION PROFILES

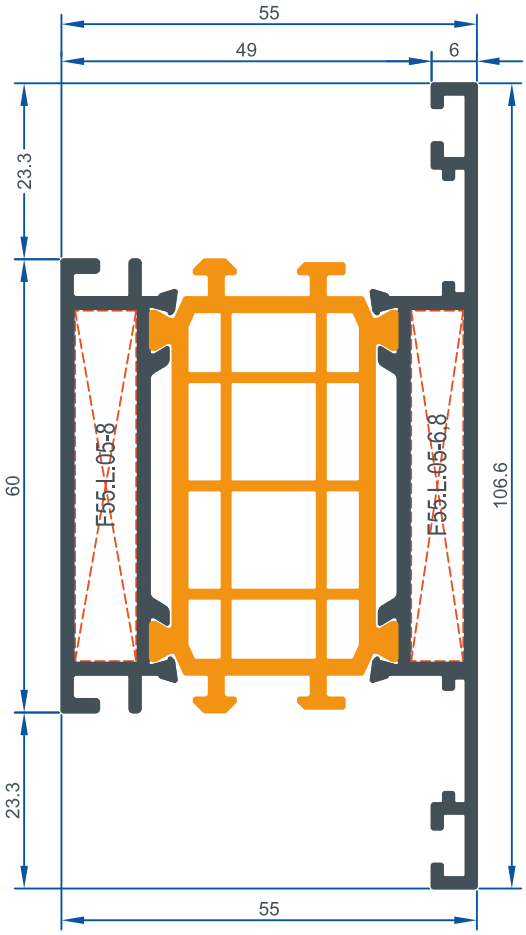


| F55.M.03 | AĞIRLIK (kg/m)<br>Weight (kg/m) | ALAŞIM<br>Alloy | |
|---|---|---|---|
| | 2,491 | EN AW 6060 T66 | |
| | **Jx** (cm⁴) | **Jy** (cm⁴) | X<br>Y Y<br>X |
| | 29,799 | 38,808 | |

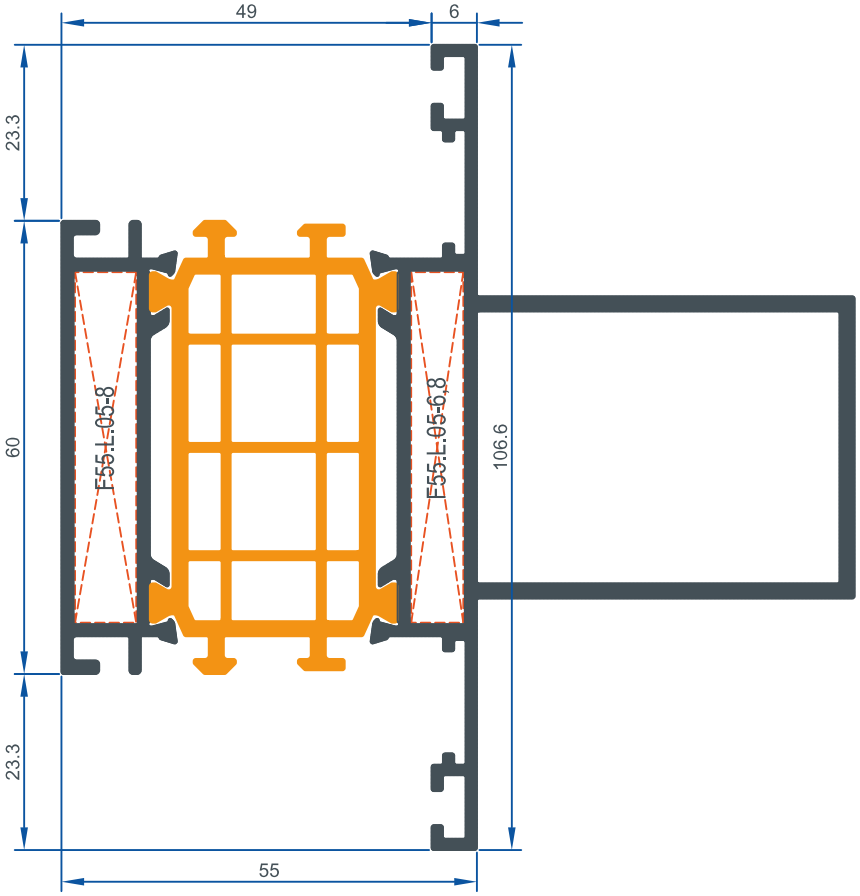


| F55.M.04 | AĞIRLIK (kg/m)<br>Weight (kg/m) | ALAŞIM<br>Alloy | |
|---|---|---|---|
| | 3,226 | EN AW 6060 T66 | |
| | **Jx** (cm⁴) | **Jy** (cm⁴) | X<br>Y Y<br>X |
| | 92,900 | 46,815 | |

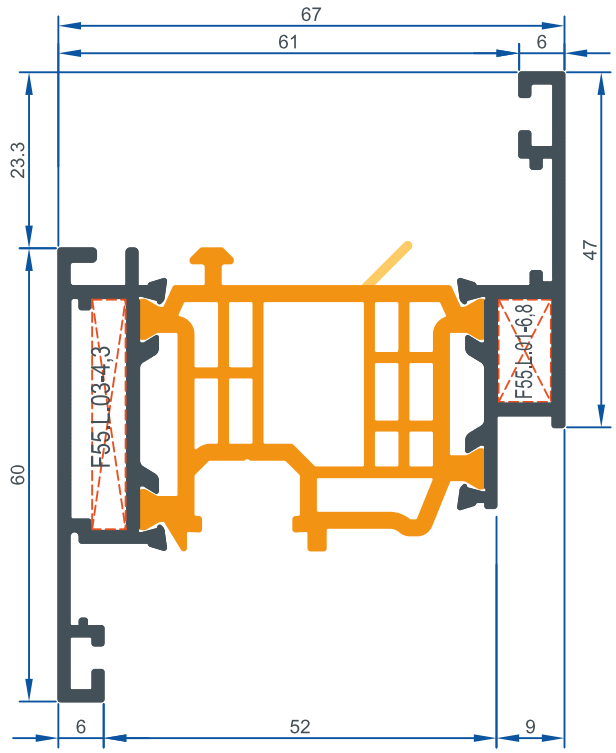


| F55.V.01 | AĞIRLIK (kg/m)<br>Weight (kg/m) | ALAŞIM<br>Alloy | |
|---|---|---|---|
| | 1,955 | EN AW 6060 T66 | |
| | **Jx** (cm⁴) | **Jy** (cm⁴) | X<br>Y — Y<br>X |
| | 34,465 | 16,111 | |

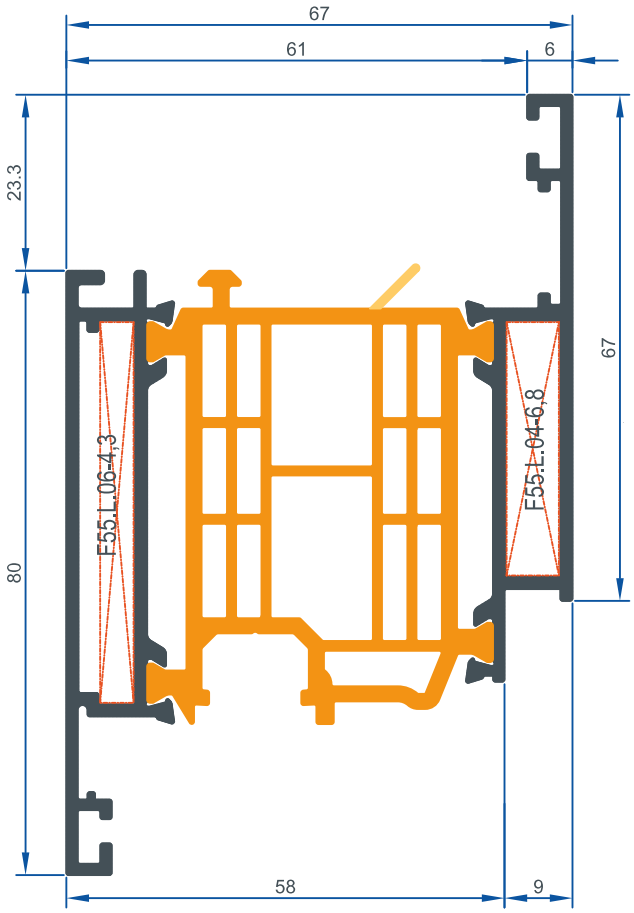


| F55.V.02 | AĞIRLIK (kg/m)<br>Weight (kg/m) | ALAŞIM<br>Alloy | |
|---|---|---|---|
| | 2,613 | EN AW 6060 T66 | |
| | **Jx** (cm⁴) | **Jy** (cm⁴) | X<br>Y — Y<br>X |
| | 44,988 | 34,261 | |

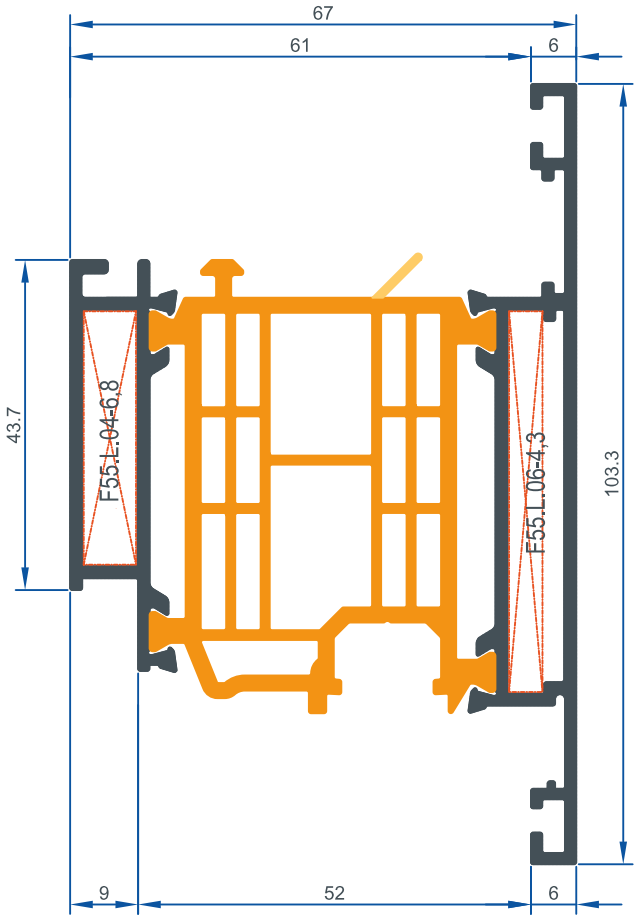


| F55.V.03 | AĞIRLIK (kg/m)<br>Weight (kg/m) | ALAŞIM<br>Alloy | |
|---|---|---|---|
| | 2,613 | EN AW 6060 T66 | |
| | **Jx** (cm⁴) | **Jy** (cm⁴) | X<br>Y Y<br>X |
| | 42,012 | 34,261 | |

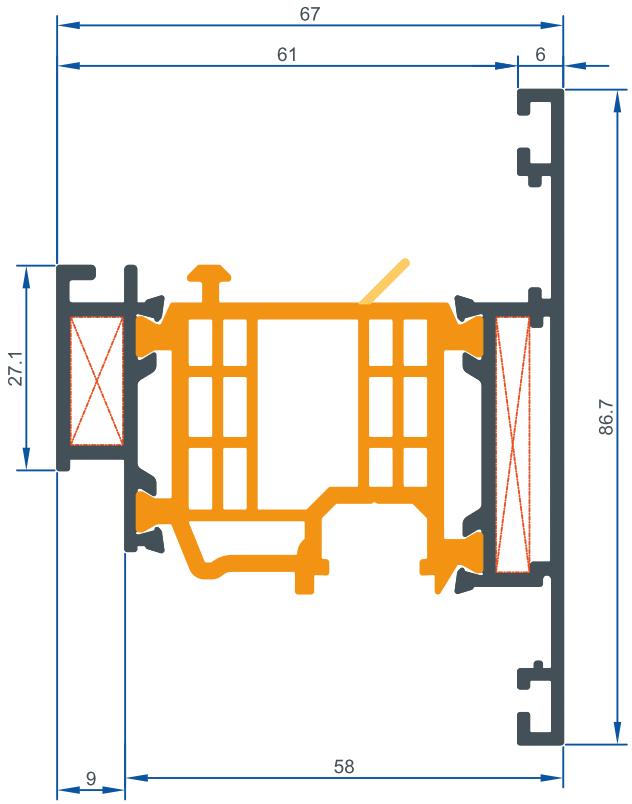


| F55.V.04 | AĞIRLIK (kg/m)<br>Weight (kg/m) | ALAŞIM<br>Alloy | |
|---|---|---|---|
| | 2,083 | EN AW 6060 T66 | |
| | **Jx** (cm⁴) | **Jy** (cm⁴) | X<br>Y Y<br>X |
| | 32,572 | 18,522 | |

# 55 HIBRIT

## ETEK VE EŞİK PROFİLLERİ
## KICK PLATE AND THRESHOLD PROFILES

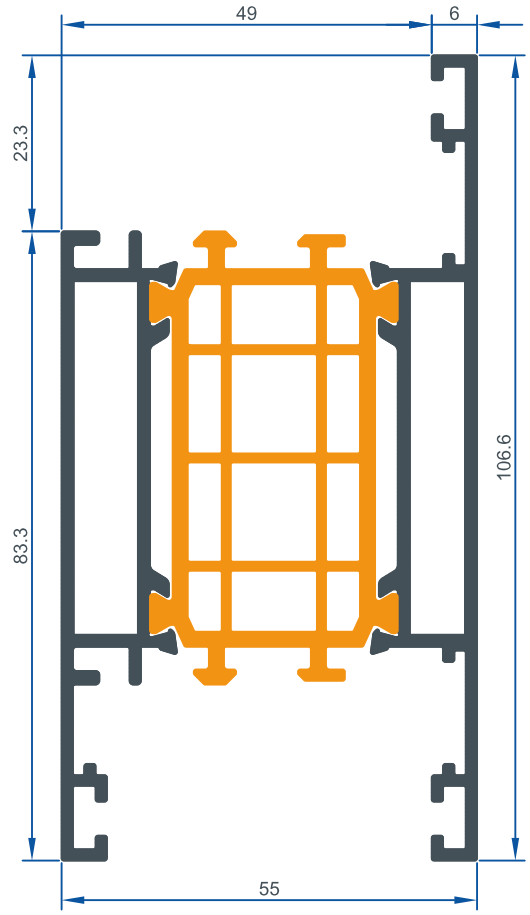


| F55.K.01 | AĞIRLIK (kg/m)<br>Weight (kg/m) | ALAŞIM<br>Alloy | |
|---|---|---|---|
| | 2,642 | EN AW 6060 T66 | |
| | **Jx** (cm⁴) | **Jy** (cm⁴) | X<br>Y Y<br>X |
| | 34,337 | 48,825 | |

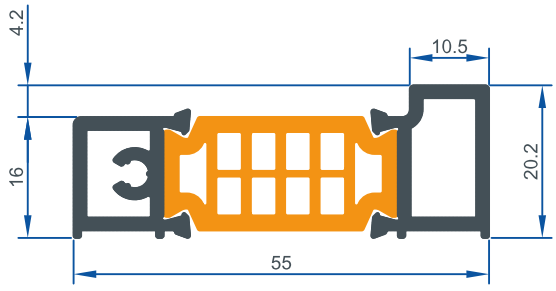


| F55.K.02 | AĞIRLIK (kg/m)<br>Weight (kg/m) | ALAŞIM<br>Alloy | |
|---|---|---|---|
| | 0,965 | EN AW 6060 T66 | |
| | **Jx** (cm⁴) | **Jy** (cm⁴) | X<br>Y Y<br>X |
| | 9,739 | 0,827 | |

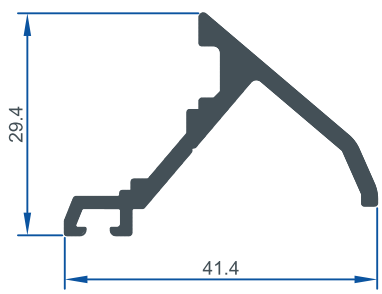


| F55.K.03 | AĞIRLIK (kg/m)<br>Weight (kg/m) | ALAŞIM<br>Alloy | |
|---|---|---|---|
| | 0,441 | EN AW 6060 T66 | |
| | **Jx** (cm⁴) | **Jy** (cm⁴) | X<br>Y Y<br>X |
| | 1,904 | 0,981 | |

# 55 HIBRIT

## ADAPTÖR PROFİLLERİ
## ADAPTER PROFILES

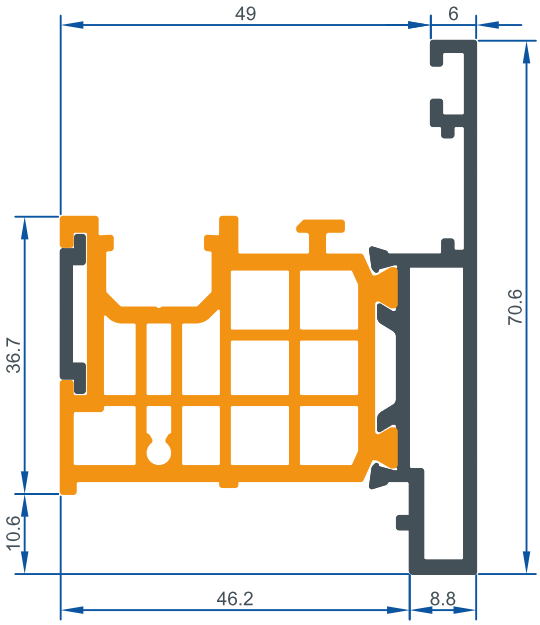


| F55.A.01 | AĞIRLIK (kg/m)<br>Weight (kg/m) | ALAŞIM<br>Alloy | |
|---|---|---|---|
| | 1,588 | EN AW 6060 T66 | |
| | **Jx** (cm⁴) | **Jy** (cm⁴) | X<br>Y Y<br>X |
| | 8,215 | 10,807 | |

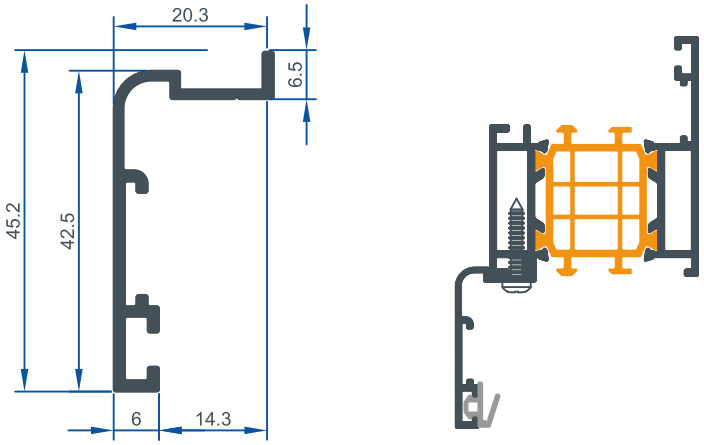


| F55.A.02 | AĞIRLIK (kg/m)<br>Weight (kg/m) | ALAŞIM<br>Alloy | |
|---|---|---|---|
| | 0,330 | EN AW 6060 T66 | |
| | **Jx** (cm⁴) | **Jy** (cm⁴) | X<br>Y Y<br>X |
| | 0,480 | 2,624 | |

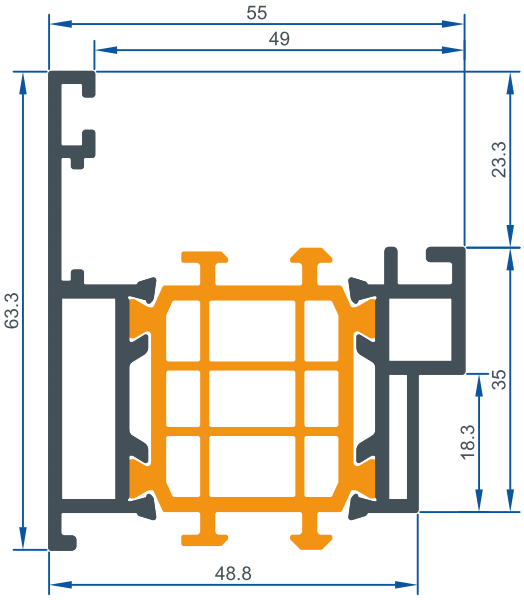


| F55.A.05 | AĞIRLIK (kg/m)<br>Weight (kg/m) | ALAŞIM<br>Alloy | |
|---|---|---|---|
| | 1,704 | EN AW 6060 T66 | |
| | **Jx** (cm⁴) | **Jy** (cm⁴) | X<br>Y Y<br>X |
| | 17,896 | 9,360 | |

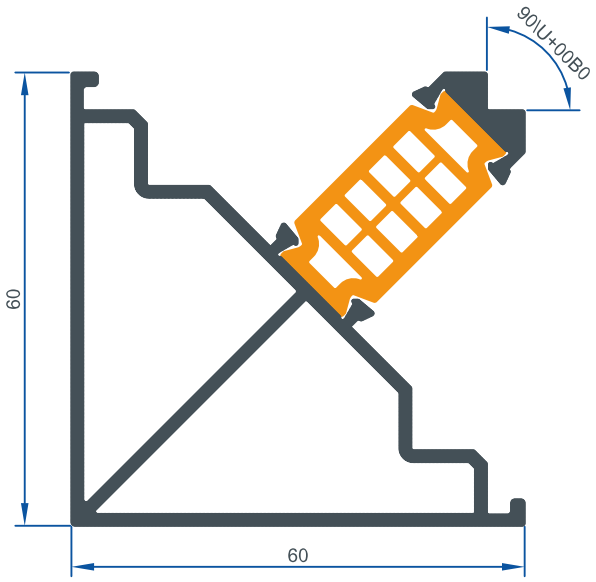


| F55.A.03 | AĞIRLIK (kg/m)<br>Weight (kg/m) | ALAŞIM<br>Alloy | |
|---|---|---|---|
| | 1,672 | EN AW 6060 T66 | |
| | **Jx** (cm⁴) | **Jy** (cm⁴) | X<br>Y — Y<br>X |
| | 20,179 | 20,179 | |

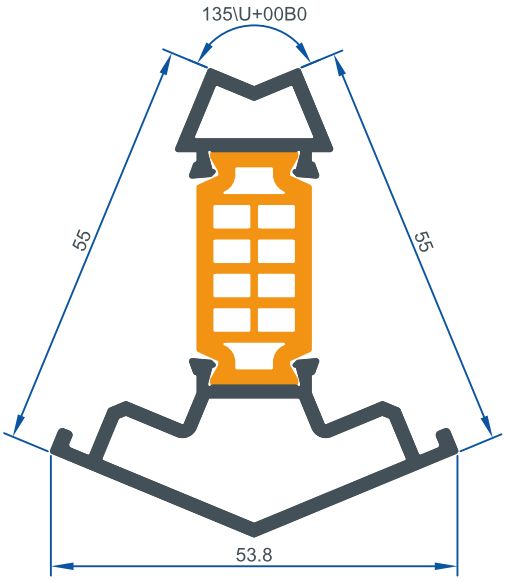


| F55.A.03 | AĞIRLIK (kg/m)<br>Weight (kg/m) | ALAŞIM<br>Alloy | |
|---|---|---|---|
| | 1,178 | EN AW 6060 T66 | |
| | **Jx** (cm⁴) | **Jy** (cm⁴) | X<br>Y — Y<br>X |
| | 4,617 | 12,593 | |

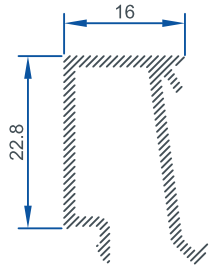


| F55.G.01 | AĞIRLIK (kg/m)<br>Weight (kg/m) | ALAŞIM<br>Alloy | |
|---|---|---|---|
| | 0,288 | EN AW 6060 T66 | |
| | **Jx** (cm⁴) | **Jy** (cm⁴) | |
| | 0,390 | 0,853 | |

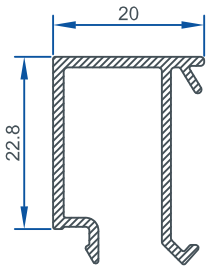


| F55.G.02 | AĞIRLIK (kg/m)<br>Weight (kg/m) | ALAŞIM<br>Alloy | |
|---|---|---|---|
| | 0,288 | EN AW 6060 T66 | |
| | **Jx** (cm⁴) | **Jy** (cm⁴) | |
| | 0,498 | 0,887 | |

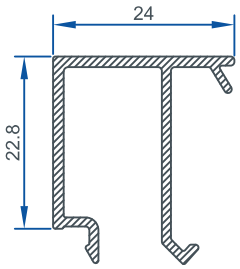


| F55.G.03 | AĞIRLIK (kg/m)<br>Weight (kg/m) | ALAŞIM<br>Alloy | |
|---|---|---|---|
| | 0,303 | EN AW 6060 T66 | |
| | **Jx** (cm⁴) | **Jy** (cm⁴) | |
| | 0,620 | 0,944 | |

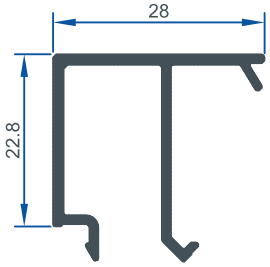


| F55.G.04 | AĞIRLIK (kg/m)<br>Weight (kg/m) | ALAŞIM<br>Alloy | |
|---|---|---|---|
| | 0,318 | EN AW 6060 T66 | |
| | **Jx** (cm⁴) | **Jy** (cm⁴) | |
| | 0,802 | 0,995 | |

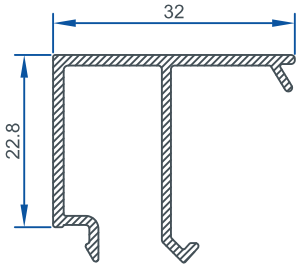


| F55.G.05 | AĞIRLIK (kg/m)<br>Weight (kg/m) | ALAŞIM<br>Alloy | |
|---|---|---|---|
| | 0,333 | EN AW 6060 T66 | |
| | **Jx** (cm⁴) | **Jy** (cm⁴) | |
| | 1,051 | 1,042 | |

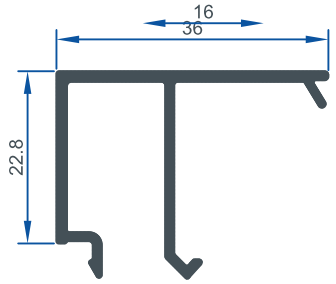


| F55.G.06 | AĞIRLIK (kg/m) Weight (kg/m) | ALAŞIM Alloy | |
|---|---|---|---|
| | 0,348 | EN AW 6060 T66 | |
| | **Jx** (cm⁴) | **Jy** (cm⁴) | X Y Y X |
| | 1,376 | 1,085 | |

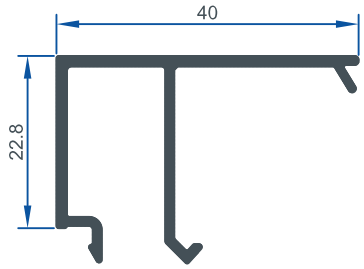


| F55.G.07 | AĞIRLIK (kg/m) Weight (kg/m) | ALAŞIM Alloy | |
|---|---|---|---|
| | 0,363 | EN AW 6060 T66 | |
| | **Jx** (cm⁴) | **Jy** (cm⁴) | X Y Y X |
| | 1,785 | 1,124 | |

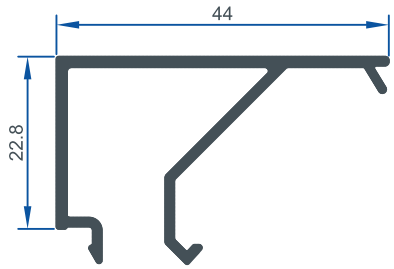


| F55.G.08 | AĞIRLIK (kg/m) Weight (kg/m) | ALAŞIM Alloy | |
|---|---|---|---|
| | 1,363 | EN AW 6060 T66 | |
| | **Jx** (cm⁴) | **Jy** (cm⁴) | X Y Y X |
| | 1,785 | 1,124 | |

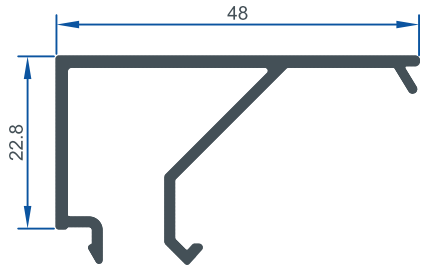


| F55.G.09 | AĞIRLIK (kg/m) Weight (kg/m) | ALAŞIM Alloy | |
|---|---|---|---|
| | 0,414 | EN AW 6060 T66 | |
| | **Jx** (cm⁴) | **Jy** (cm⁴) | X Y Y X |
| | 2,997 | 1,208 | |

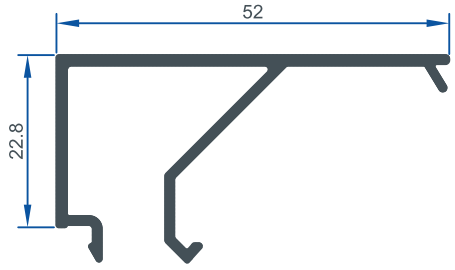


| F55.G.10 | AĞIRLIK (kg/m) Weight (kg/m) | ALAŞIM Alloy | |
|---|---|---|---|
| | 0,429 | EN AW 6060 T66 | |
| | **Jx** (cm⁴) | **Jy** (cm⁴) | X Y Y X |
| | 3,652 | 1,239 | |

# 55 HIBRIT

## CAM TABLOSU
## GLASS TABLE

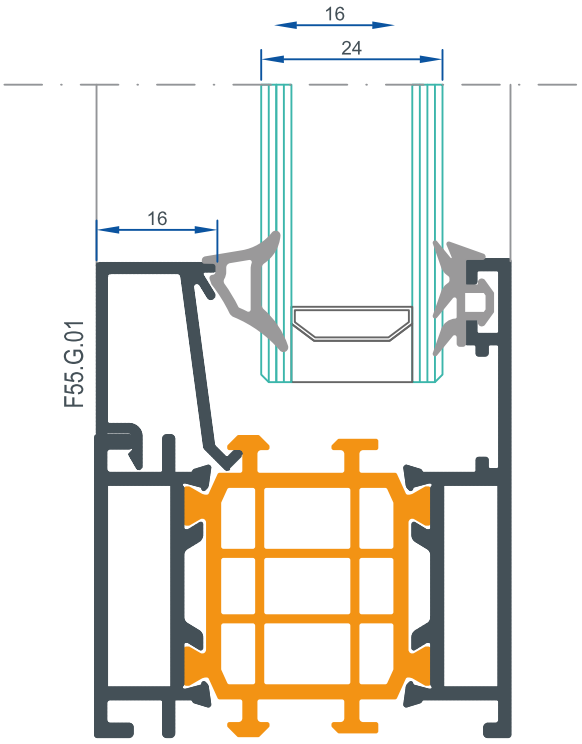


| | | | | |
|---|---|---|---|---|
| | FTL.01.01 | FTL.01.02 | FTL.01.03 | FTL.01.04 |
| F55.G.01 | 23 mm | 24 mm | 25 mm | 26 mm |
| F55.G.02 | 19 mm | 20 mm | 21 mm | 22 mm |
| F55.G.03 | 15 mm | 16 mm | 17 mm | 18 mm |
| F55.G.04 | 11 mm | 12 mm | 13 mm | 14 mm |
| F55.G.05 | 7 mm | 8 mm | 9 mm | 10 mm |
| F55.G.06 | 3 mm | 5 mm | 5 mm | 6 mm |
| | | | | |
| | | | | |
| | | | | |
| | | | | |

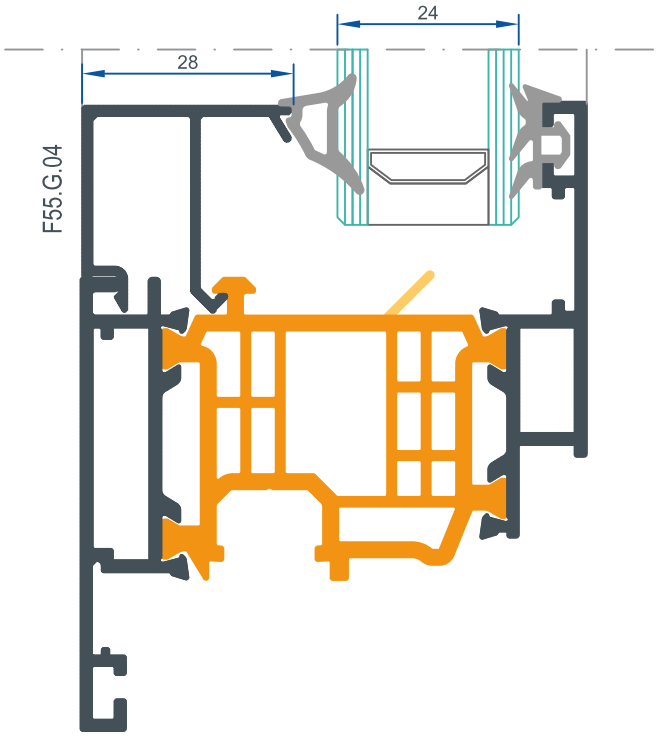


| | | | | |
|---|---|---|---|---|
| | FTL.01.01 | FTL.01.02 | FTL.01.03 | FTL.01.04 |
| F55.G.01 | 35 mm | 36 mm | 37 mm | 38 mm |
| F55.G.02 | 31 mm | 32 mm | 33 mm | 34 mm |
| F55.G.03 | 27 mm | 28 mm | 29 mm | 30 mm |
| F55.G.04 | 23 mm | 24 mm | 25 mm | 26 mm |
| F55.G.05 | 19 mm | 20 mm | 21 mm | 22 mm |
| F55.G.06 | 15 mm | 16 mm | 17 mm | 18 mm |
| F55.G.07 | 11 mm | 12 mm | 13 mm | 14 mm |
| F55.G.08 | 7 mm | 8 mm | 9 mm | 10 mm |
| F55.G.09 | 3 mm | 5 mm | 5 mm | 6 mm |
| F55.G.10 | - mm | - mm | - mm | - mm |

# KÖŞE TAKOZ PROFİLLERİ
## CORNER CLEAT PROFILES

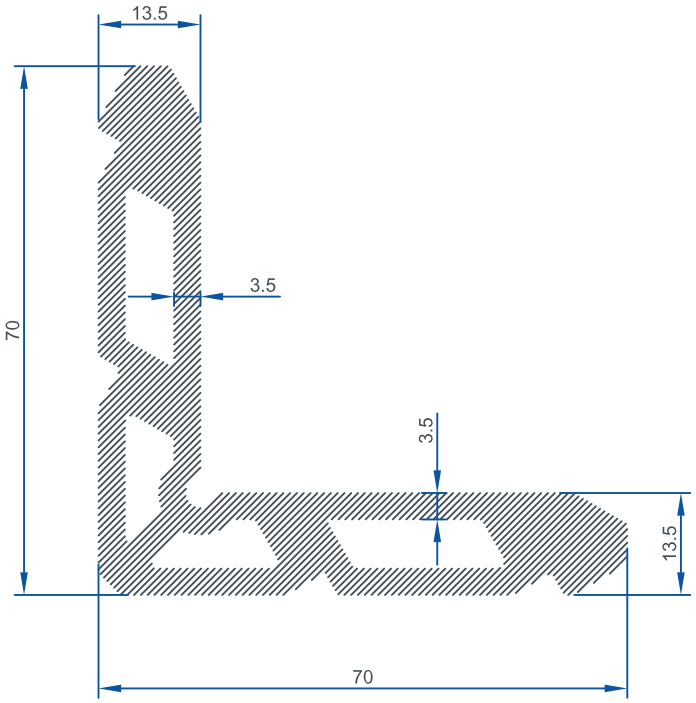


| F55.L.01 | AĞIRLIK (kg/m)<br>Weight (kg/m) | ALAŞIM<br>Alloy | |
|---|---|---|---|
| | 3,167 | EN AW 6060 T66 | |
| | **Jx** (cm⁴) | **Jy** (cm⁴) | X<br>Y Y<br>X |
| | 52,264 | 52,264 | |

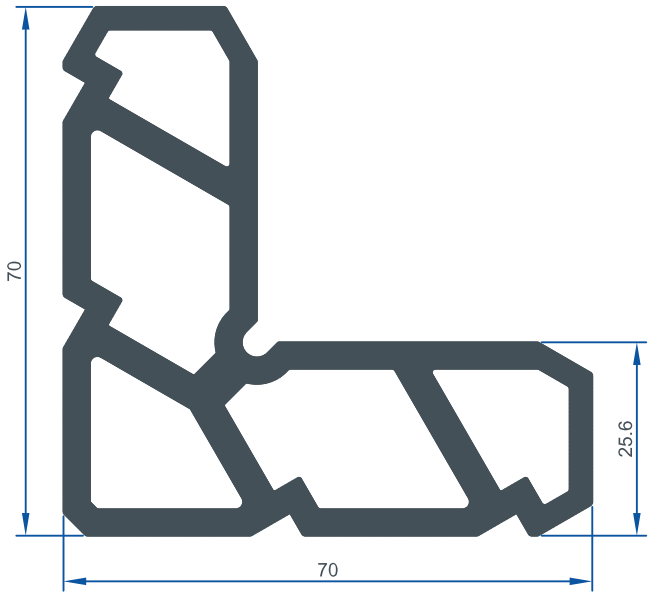


| F55.L.02 | AĞIRLIK (kg/m)<br>Weight (kg/m) | ALAŞIM<br>Alloy | |
|---|---|---|---|
| | 3,322 | EN AW 6060 T66 | |
| | **Jx** (cm⁴) | **Jy** (cm⁴) | X<br>Y Y<br>X |
| | 52,519 | 52,519 | |

# KÖŞE TAKOZ PROFİLLERİ
## CORNER CLEAT PROFILES

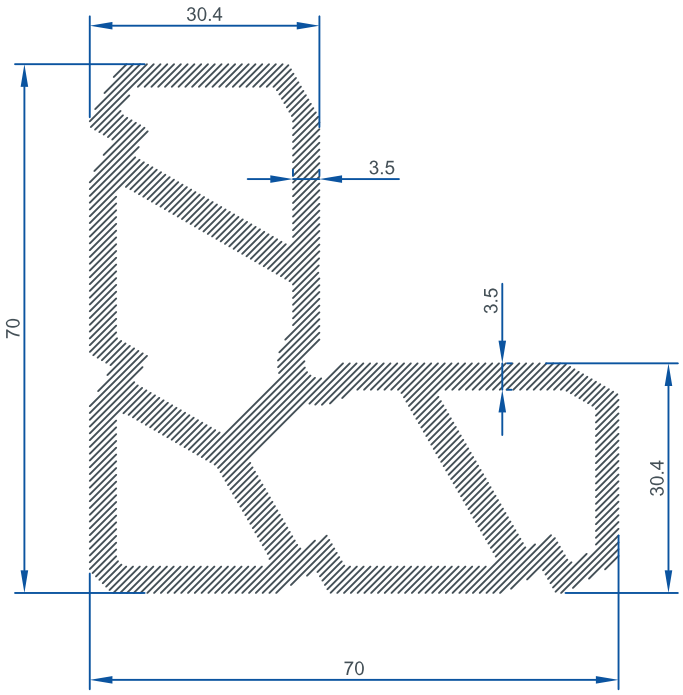


| F55.L.03 | AĞIRLIK (kg/m)<br>Weight (kg/m) | ALAŞIM<br>Alloy | |
|---|---|---|---|
| | 3,529 | EN AW 6060 T66 | |
| | **Jx** (cm⁴) | **Jy** (cm⁴) | X<br>Y — Y<br>X |
| | 55,579 | 55,579 | |

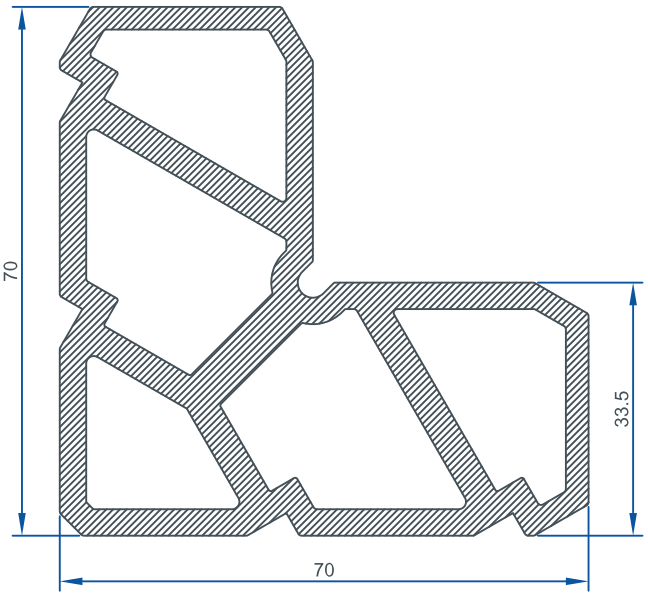


| F55.L.04 | AĞIRLIK (kg/m)<br>Weight (kg/m) | ALAŞIM<br>Alloy | |
|---|---|---|---|
| | 3,663 | EN AW 6060 T66 | |
| | **Jx** (cm⁴) | **Jy** (cm⁴) | X<br>Y — Y<br>X |
| | 57,566 | 57,566 | |

# KÖŞE TAKOZ PROFİLLERİ
## CORNER CLEAT PROFILES

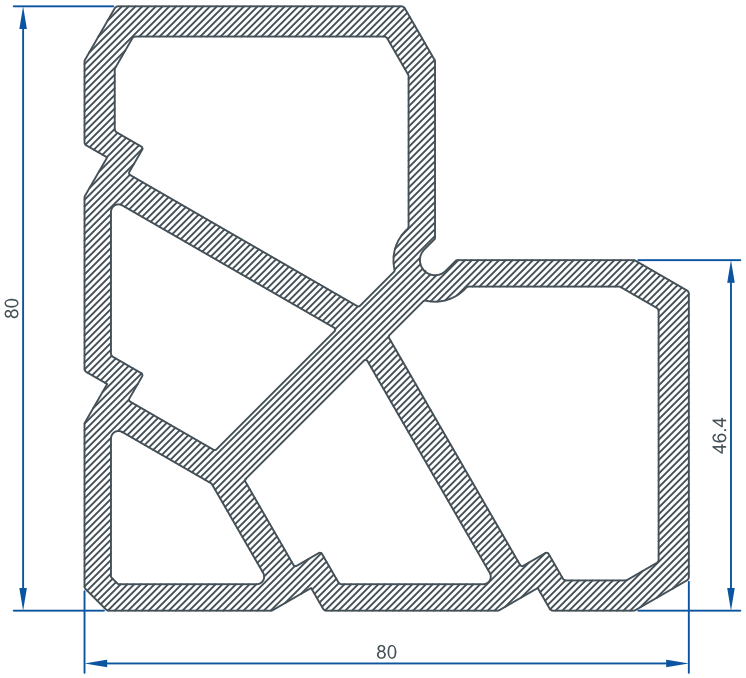


| F55.L.05 | AĞIRLIK (kg/m)<br>Weight (kg/m) | ALAŞIM<br>Alloy | |
|---|---|---|---|
| | 4,660 | EN AW 6060 T66 | |
| | **Jx** (cm⁴) | **Jy** (cm⁴) | X<br>Y — Y<br>X |
| | 101,064 | 101,064 | |

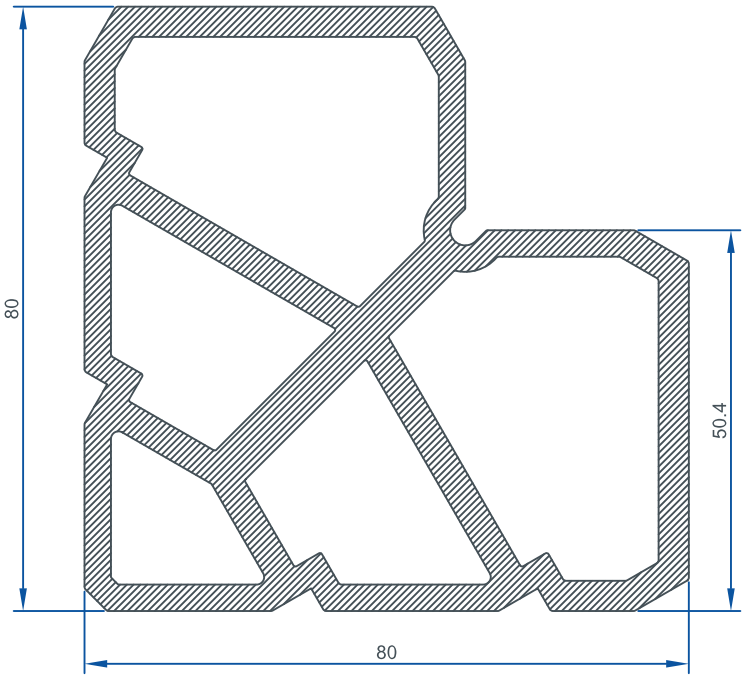


| F55.L.06 | AĞIRLIK (kg/m)<br>Weight (kg/m) | ALAŞIM<br>Alloy | |
|---|---|---|---|
| | 4,755 | EN AW 6060 T66 | |
| | **Jx** (cm⁴) | **Jy** (cm⁴) | X<br>Y — Y<br>X |
| | 105,395 | 105,395 | |

# ORTA KAYIT BAĞLANTI PROFİLLERİ
## MULLION CONNECTION PROFILES

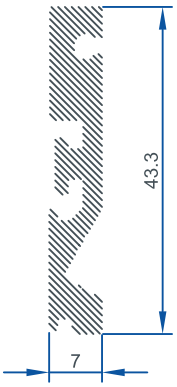


F55.J.01

| AĞIRLIK (kg/m) Weight (kg/m) | ALAŞIM Alloy | |
|---|---|---|
| 0,593 | EN AW 6060 T66 | |
| **Jx** (cm⁴) | **Jy** (cm⁴) | |
| 0,089 | 3,659 | |

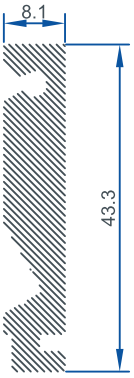


F55.J.02

| AĞIRLIK (kg/m) Weight (kg/m) | ALAŞIM Alloy | |
|---|---|---|
| 0,783 | EN AW 6060 T66 | |
| **Jx** (cm⁴) | **Jy** (cm⁴) | |
| 0,147 | 4,255 | |

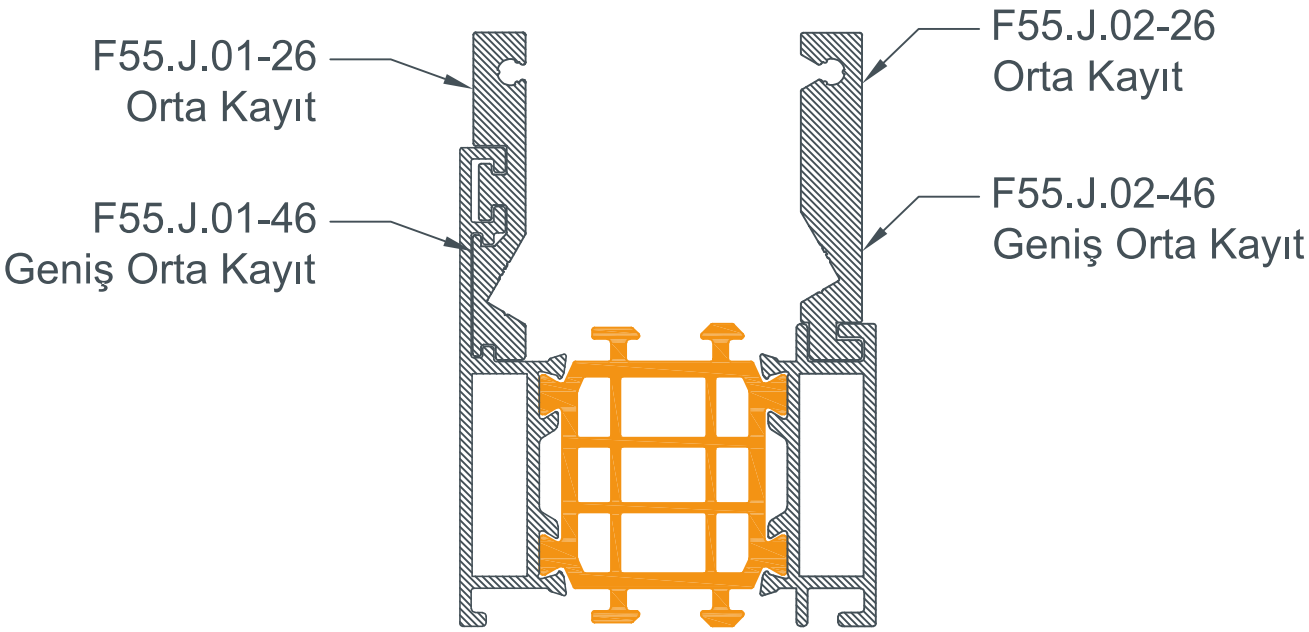

# 55 HIBRIT

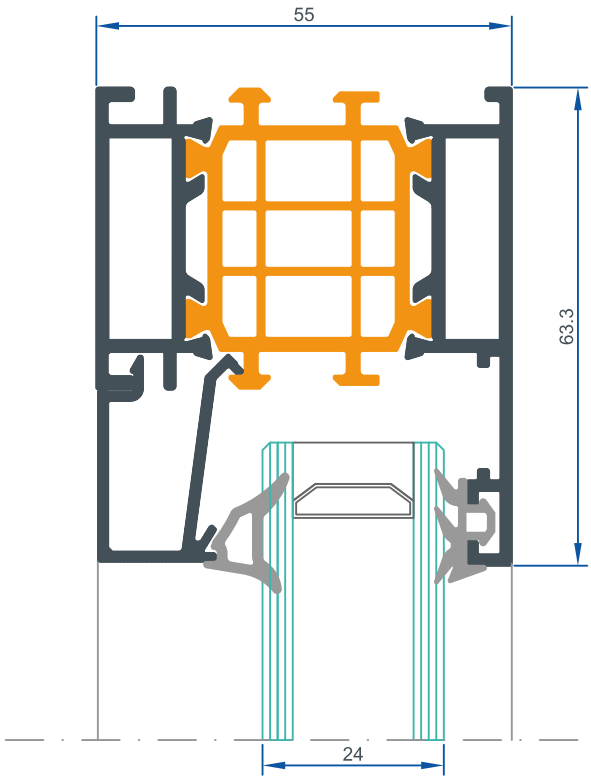


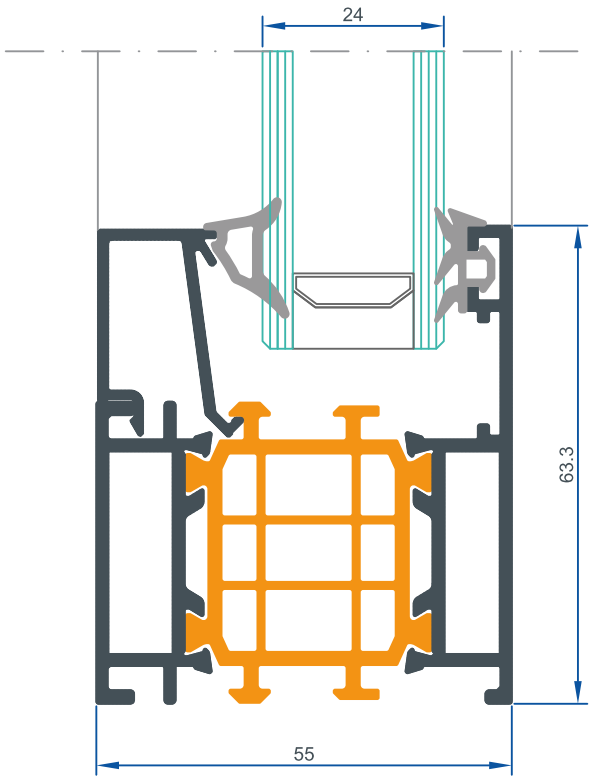

# 55 HIBRIT

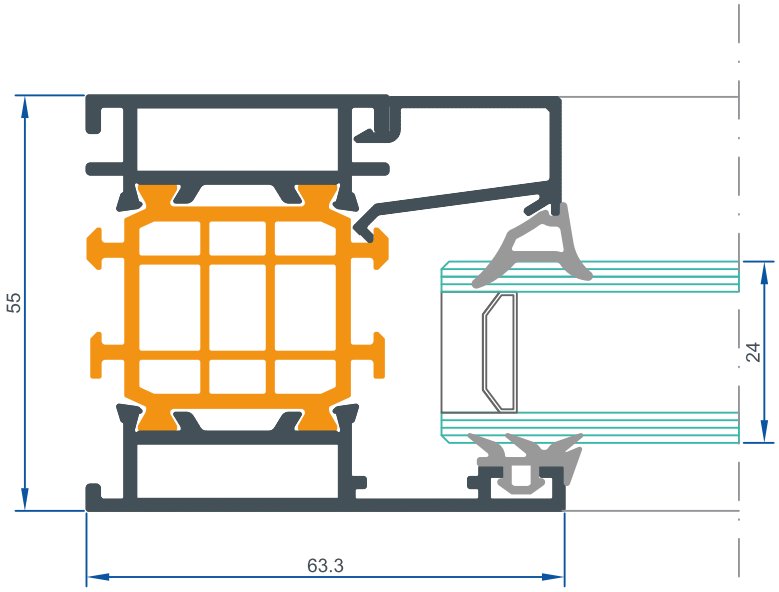


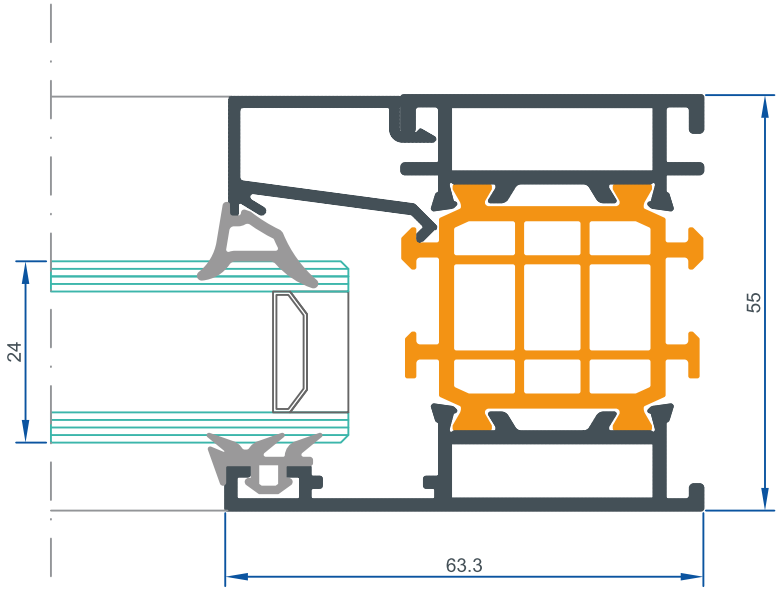

# 55 HIBRIT

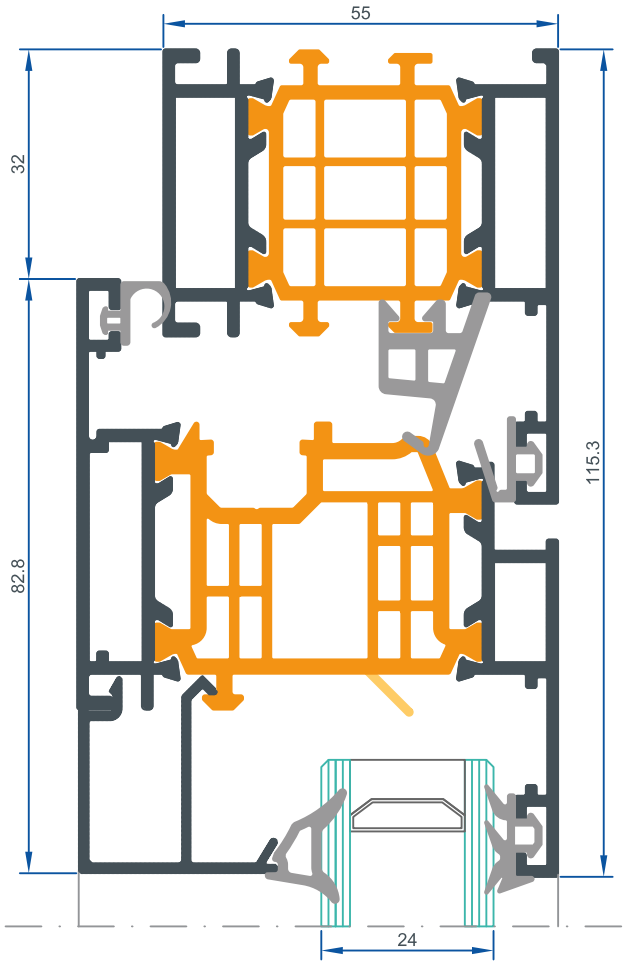


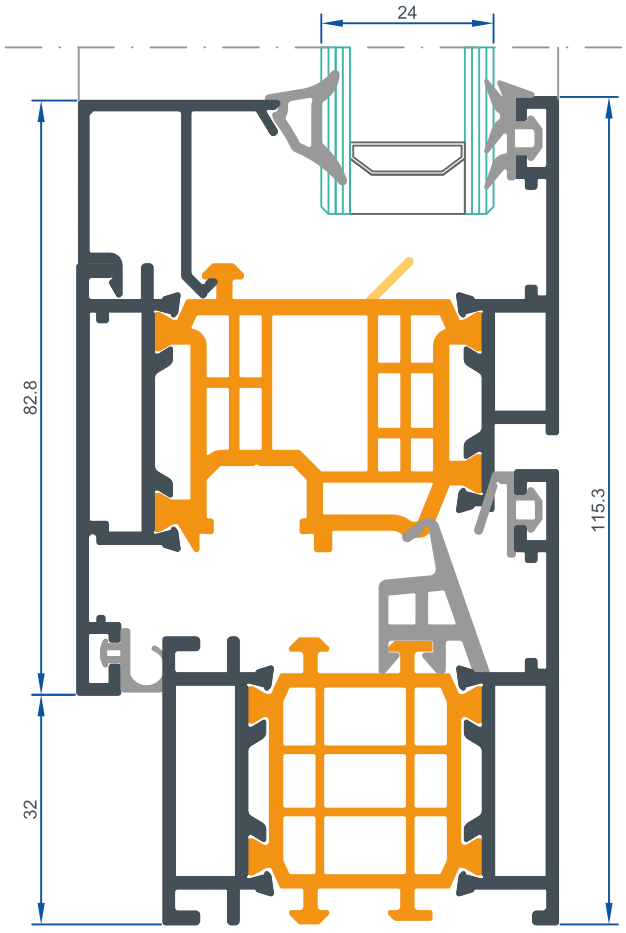

# 55 HIBRIT

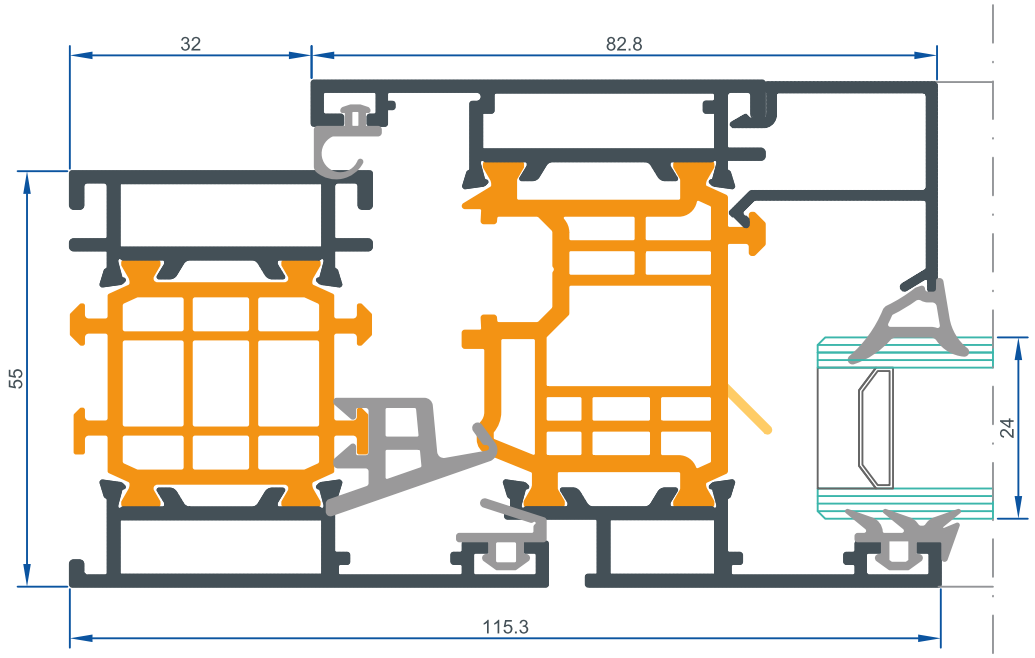


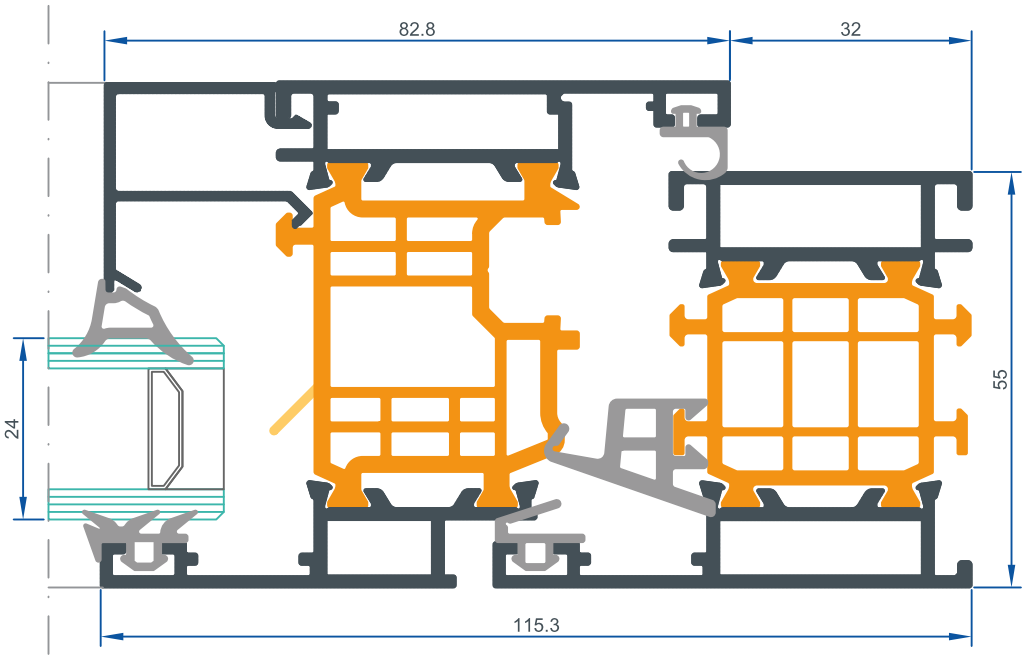

# 55 HIBRIT

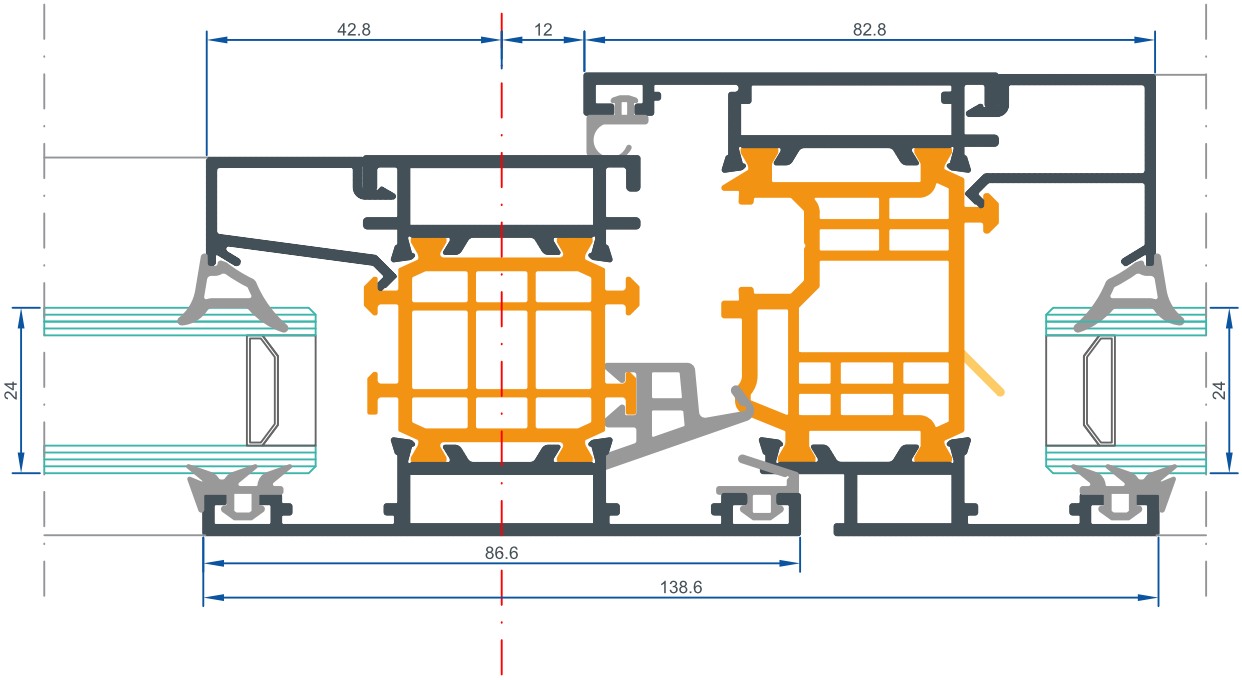


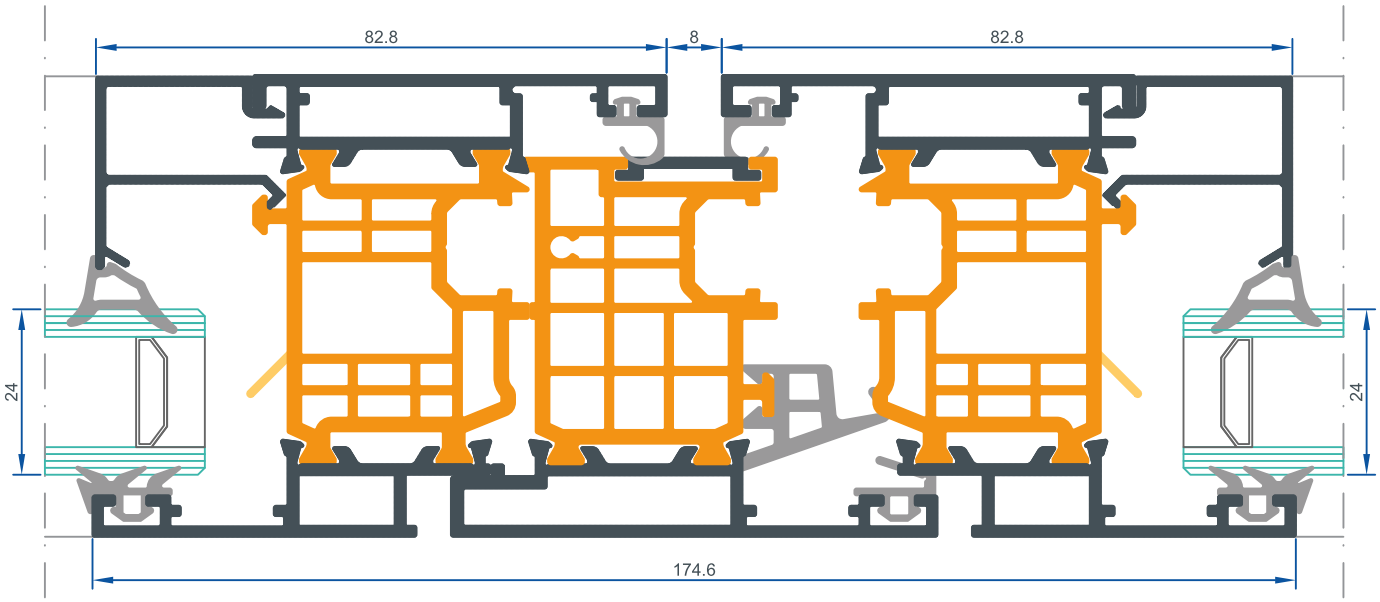

# 55 HIBRIT

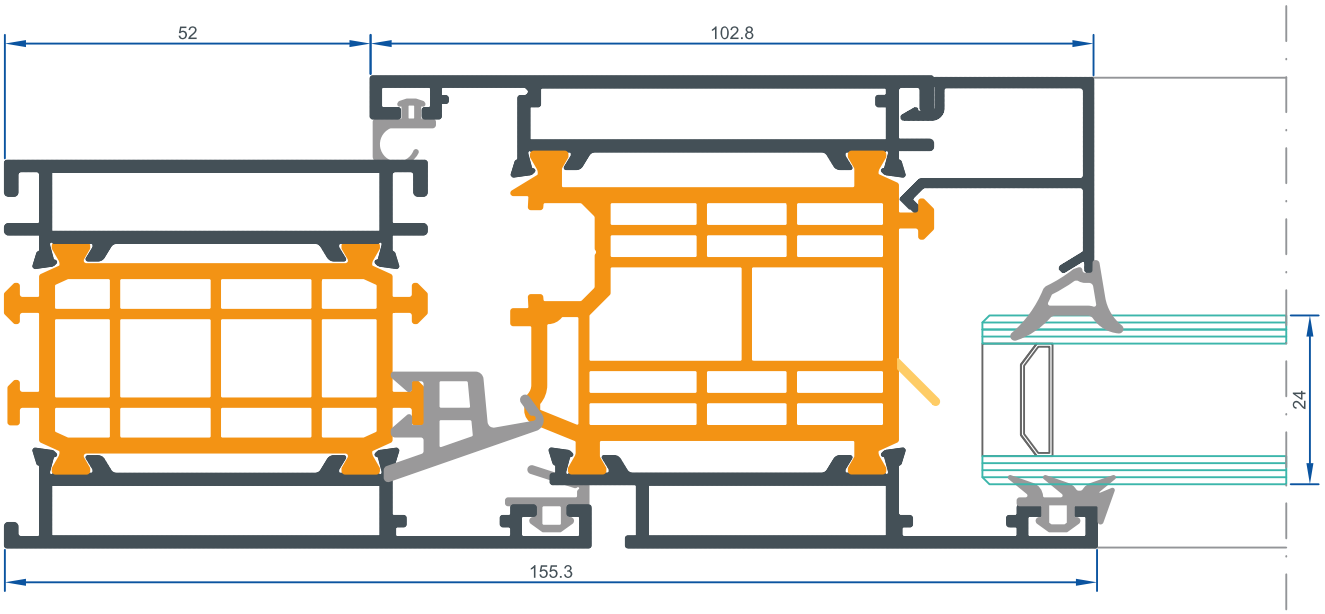


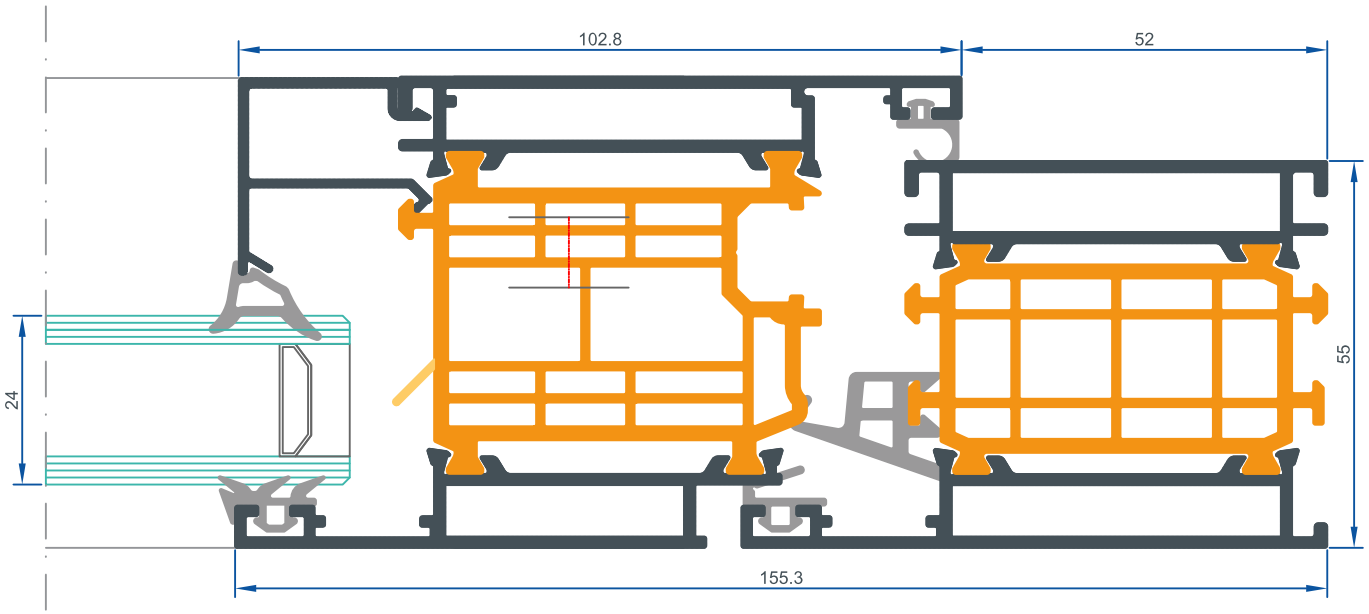

# 55 HIBRIT

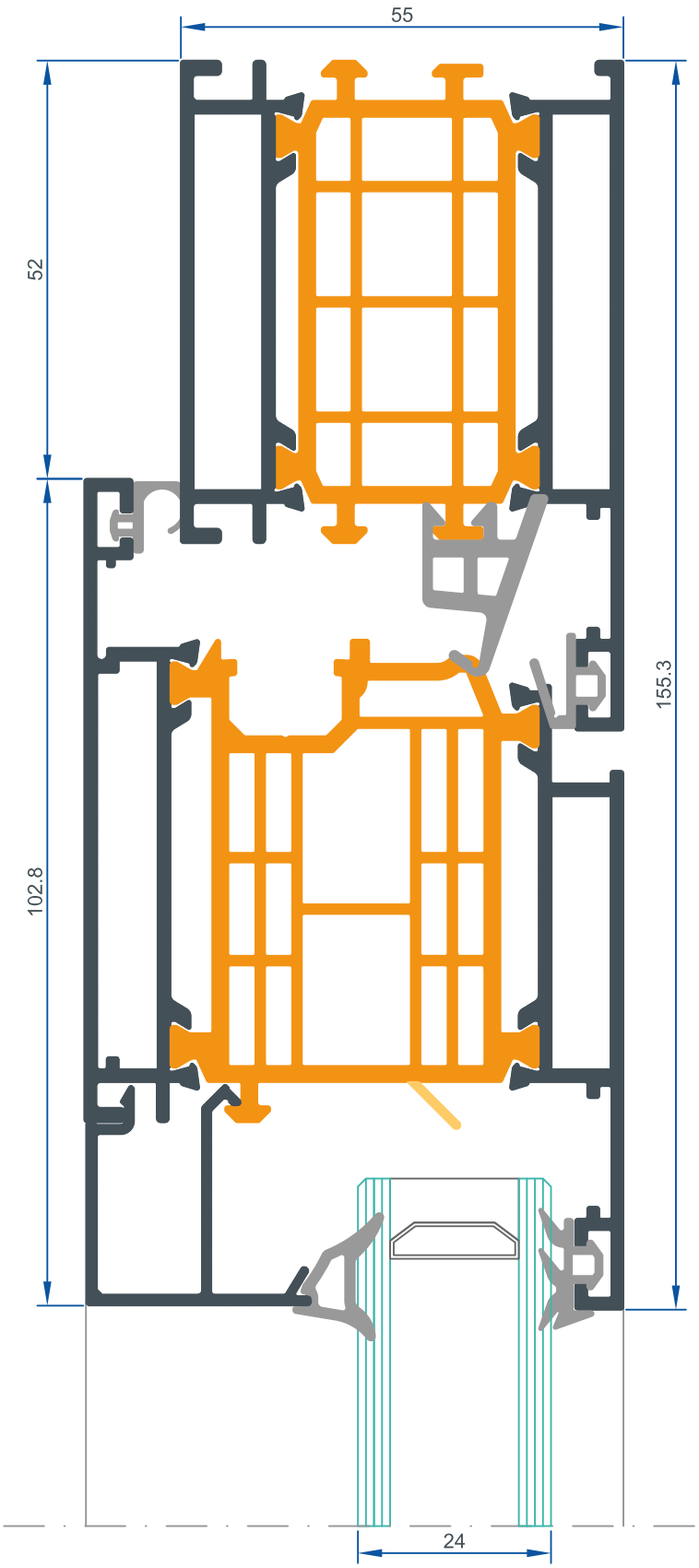

# 55 HIBRIT

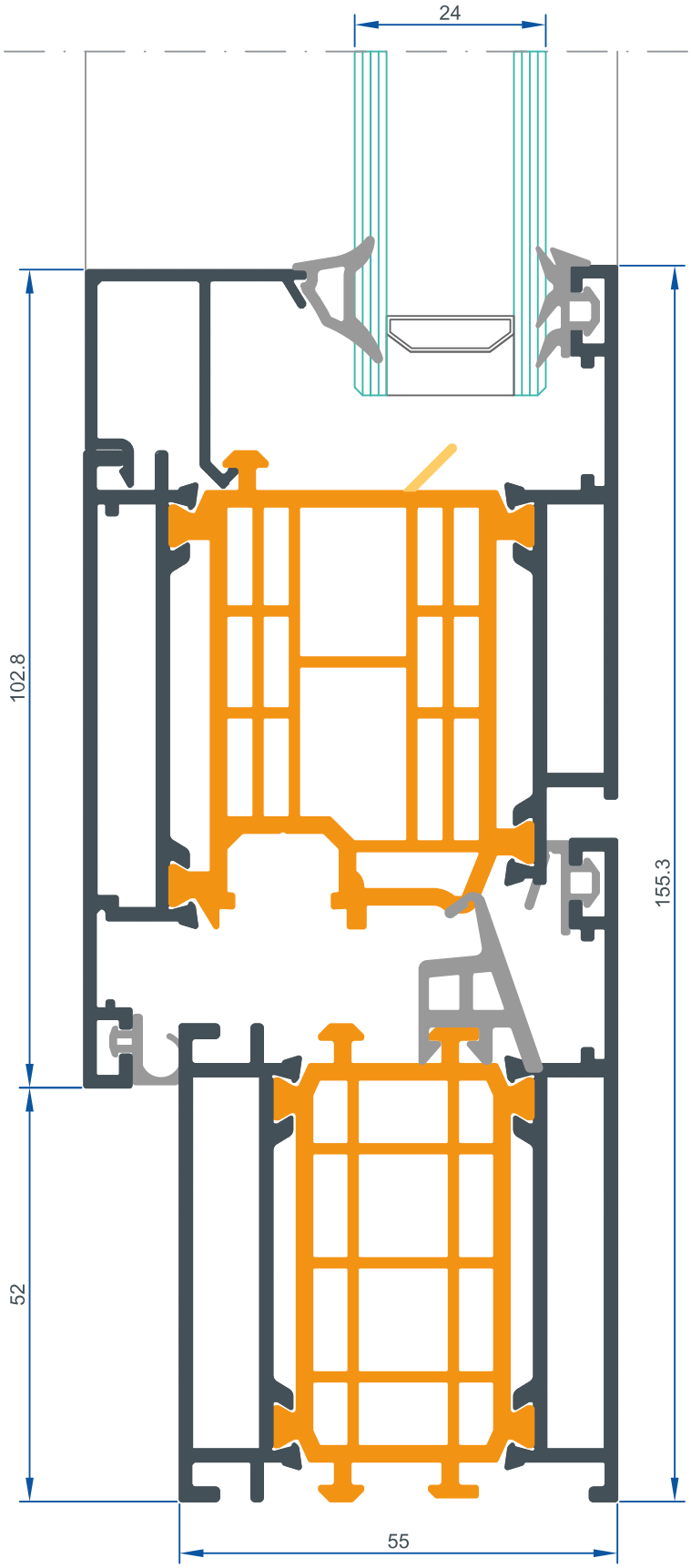

# 55 HIBRIT

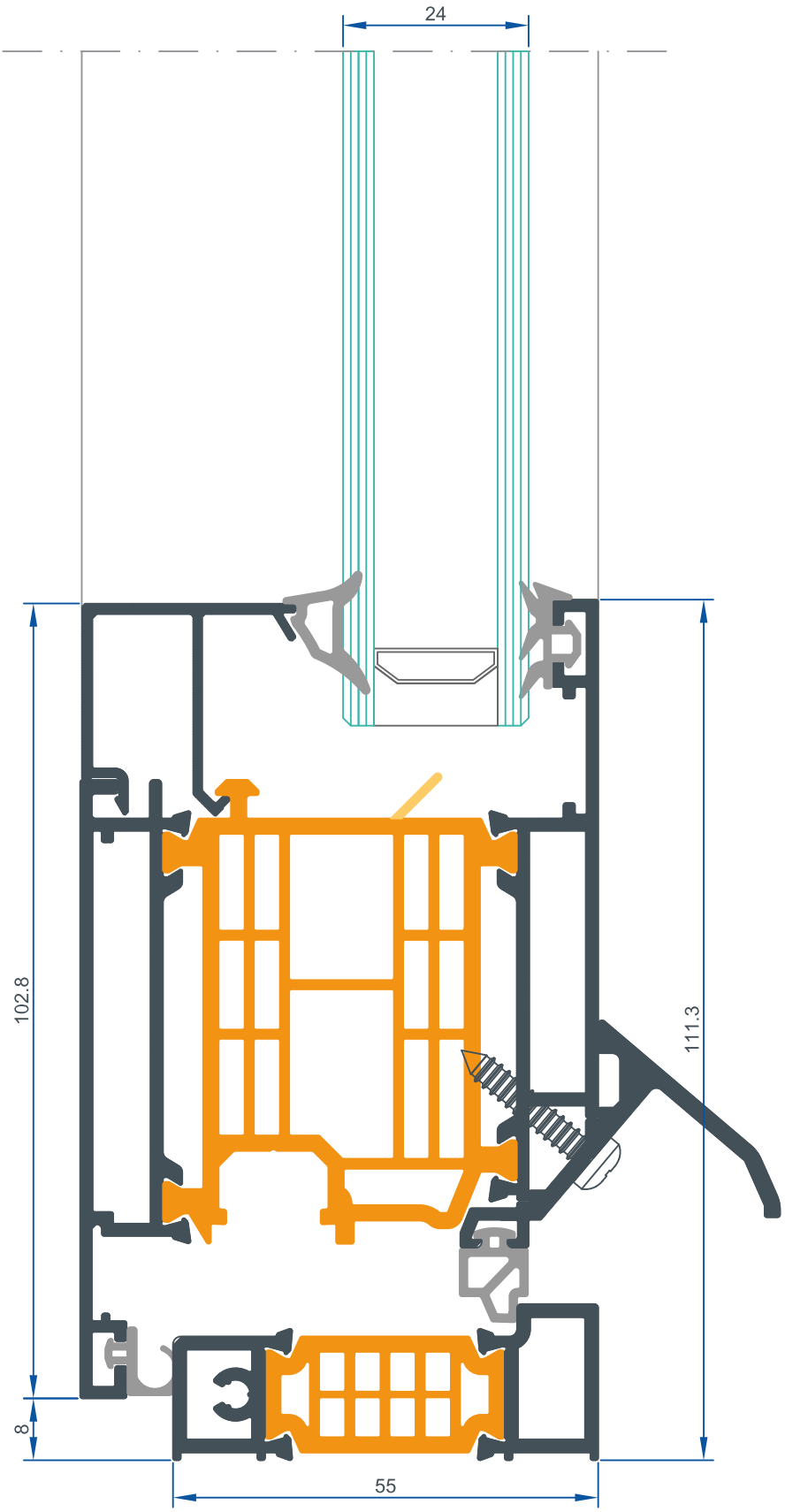

# 55 HIBRIT

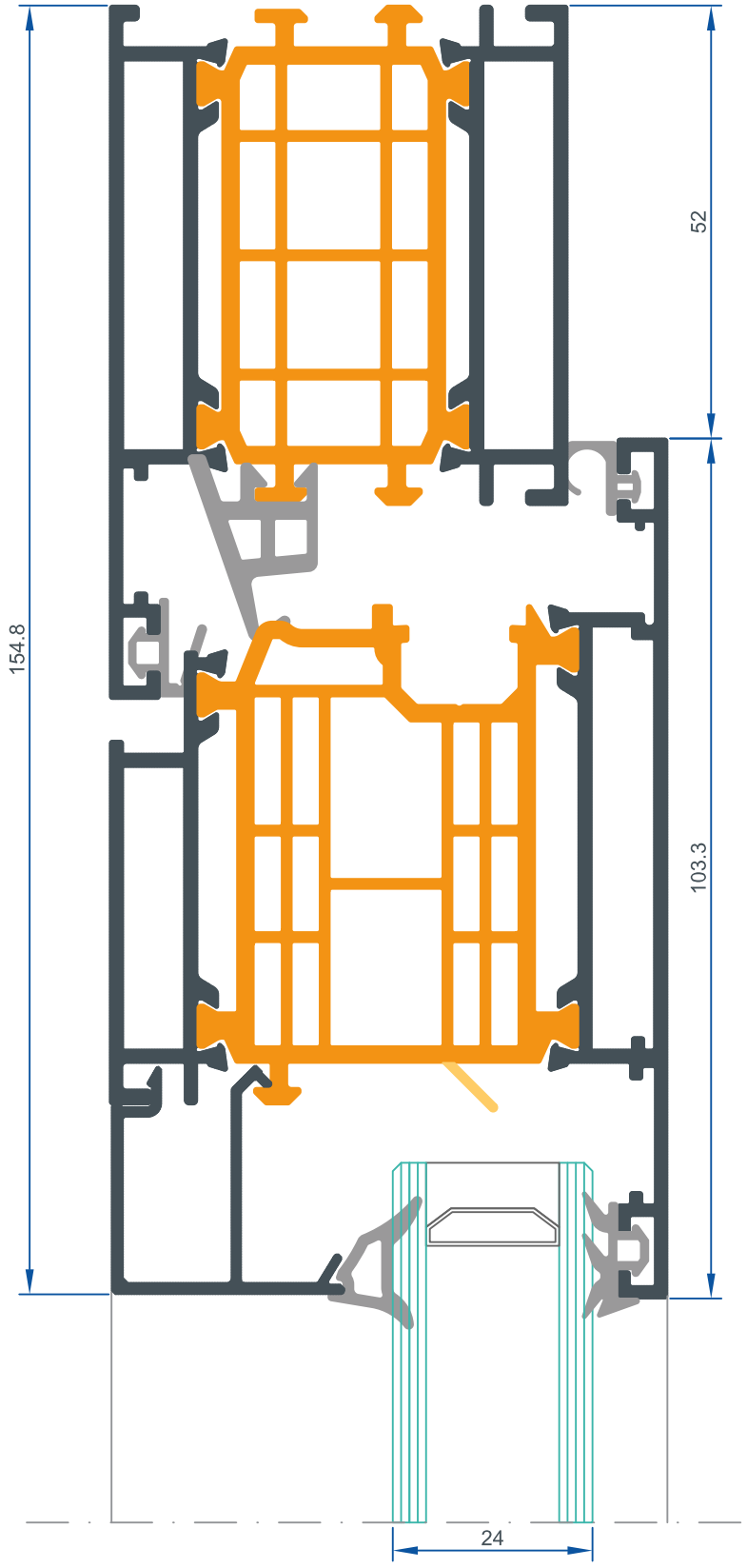

# 55 HIBRIT

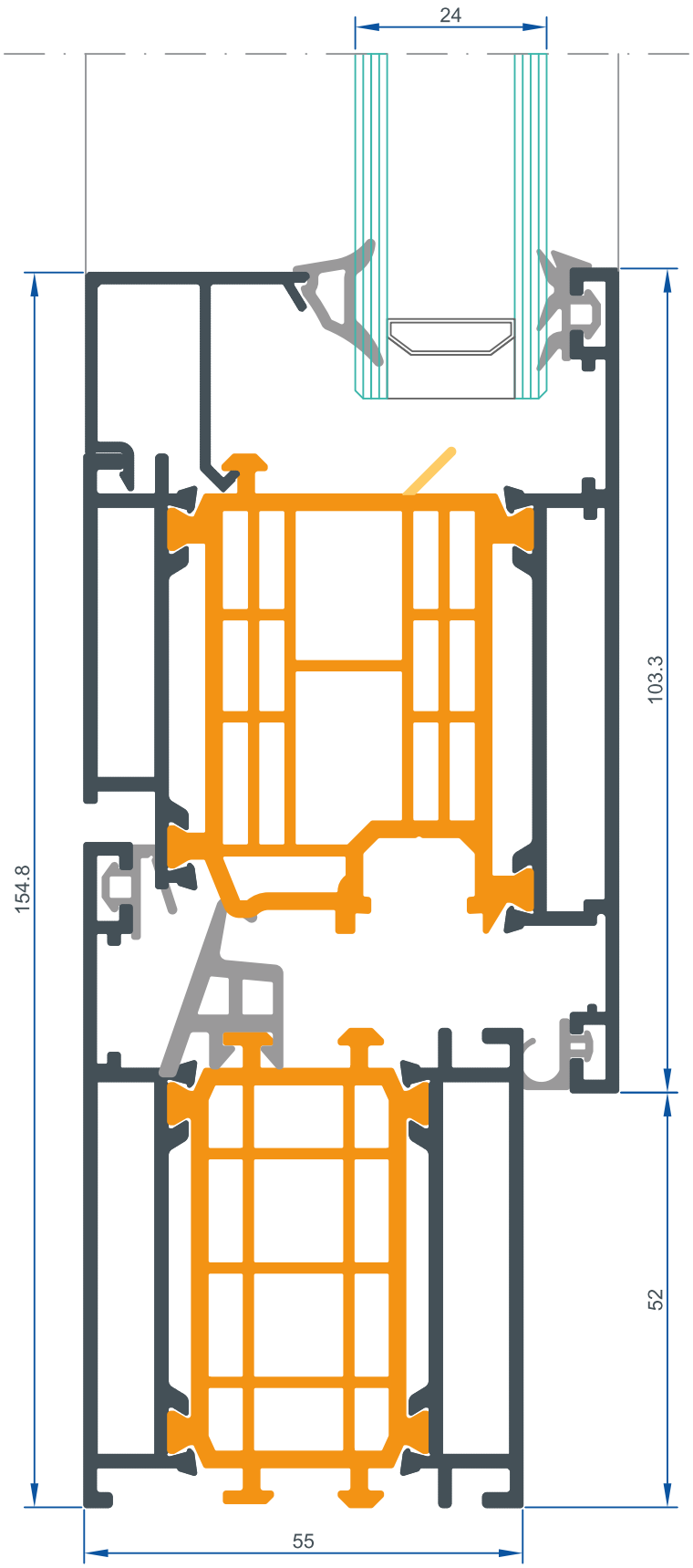

# 55 HIBRIT

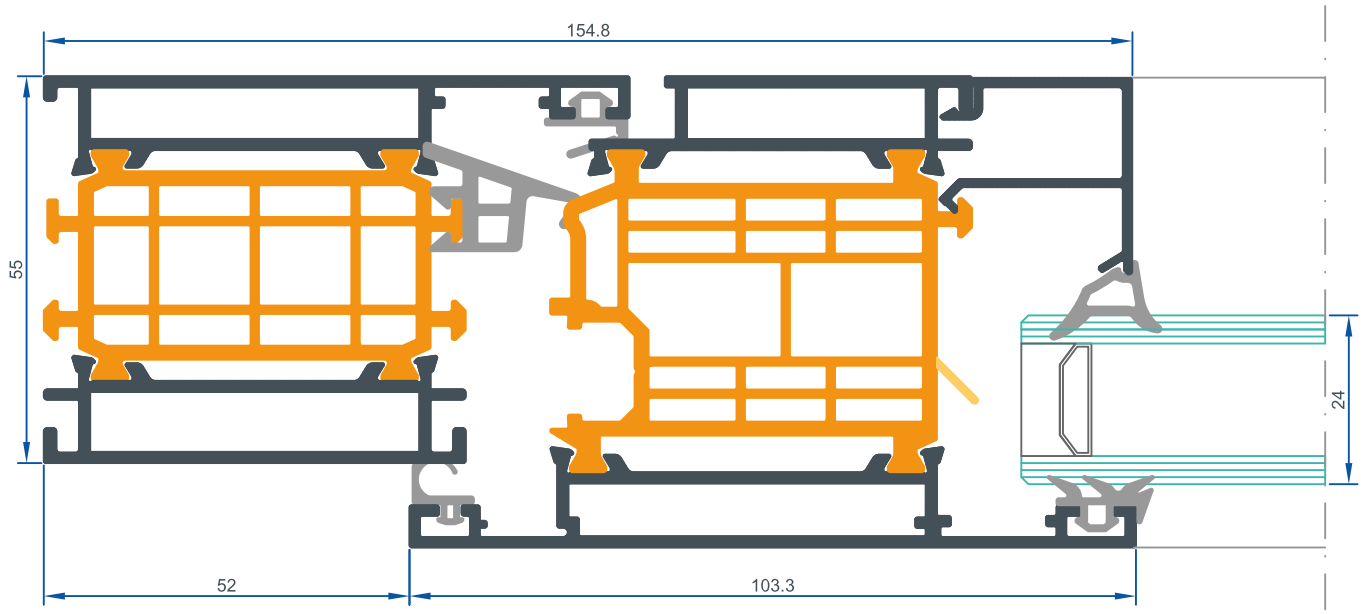


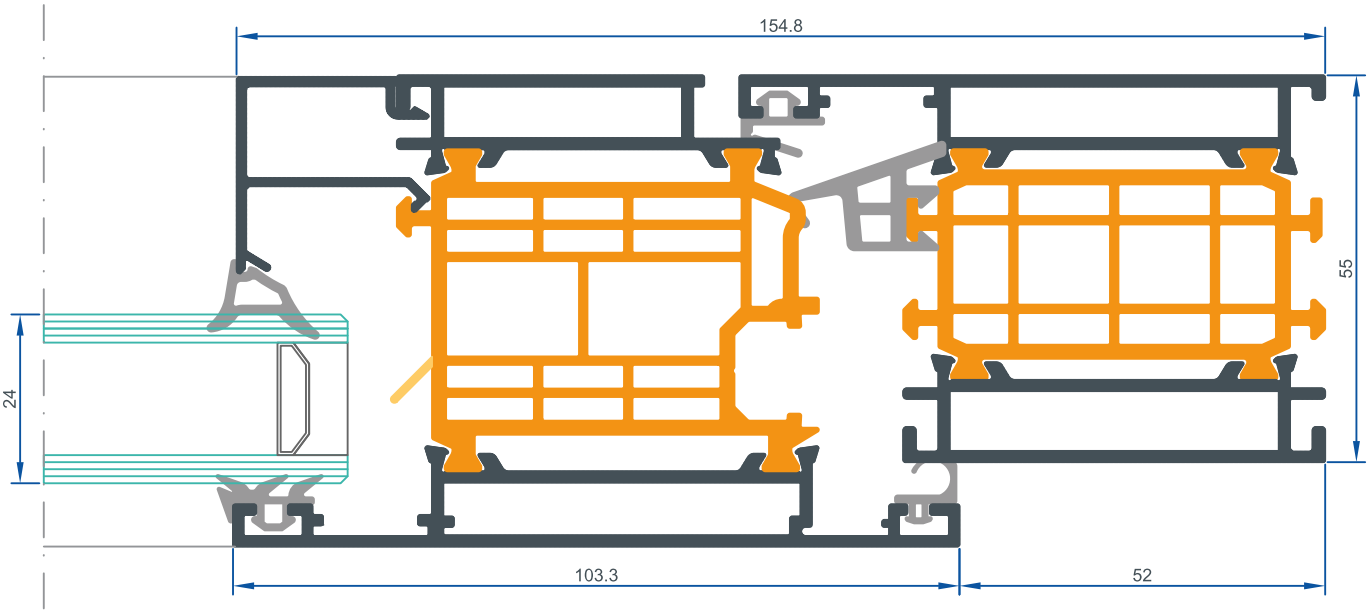

# 55 HIBRIT

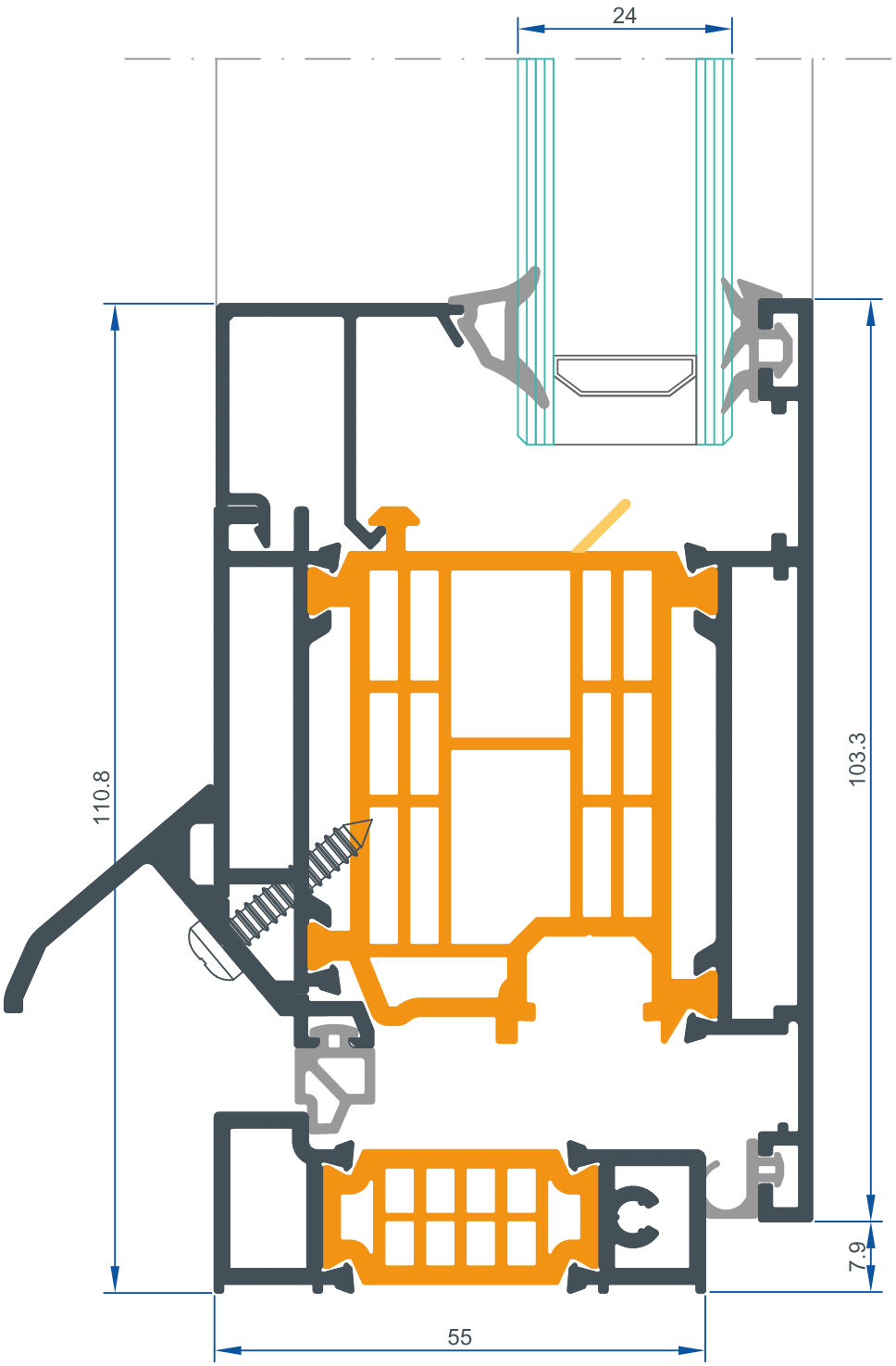

# 55 HIBRIT

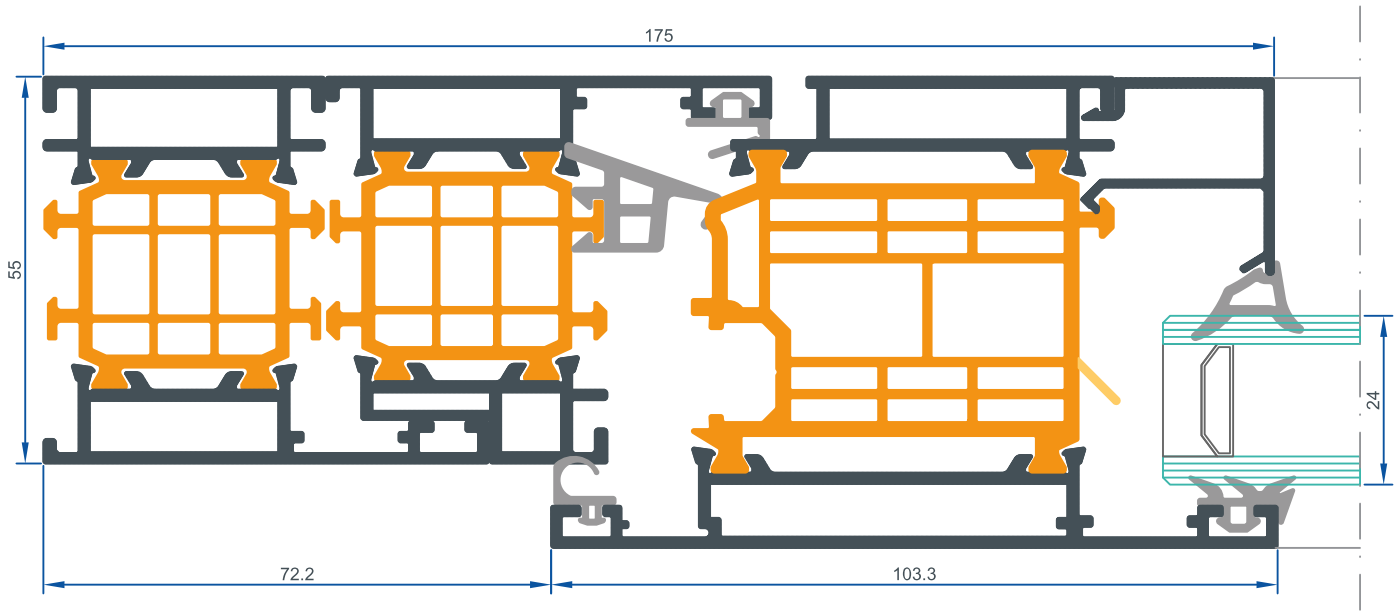


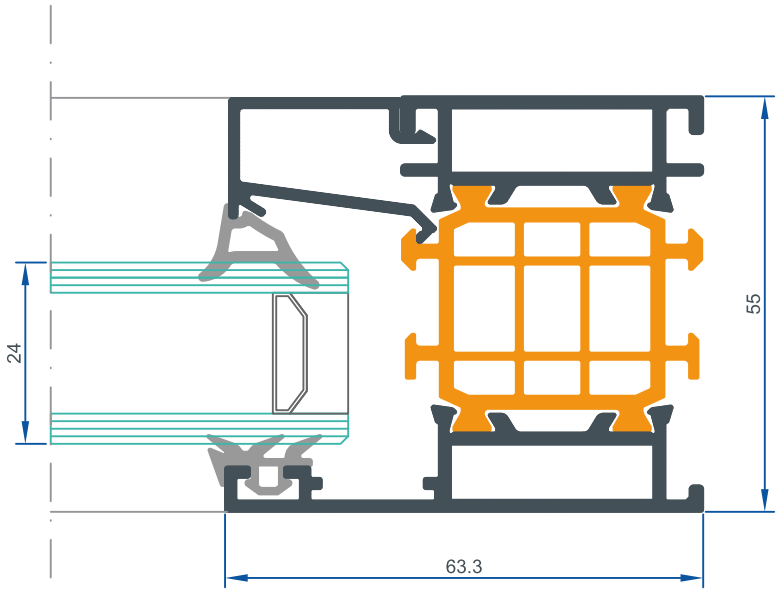

# 55 HIBRIT

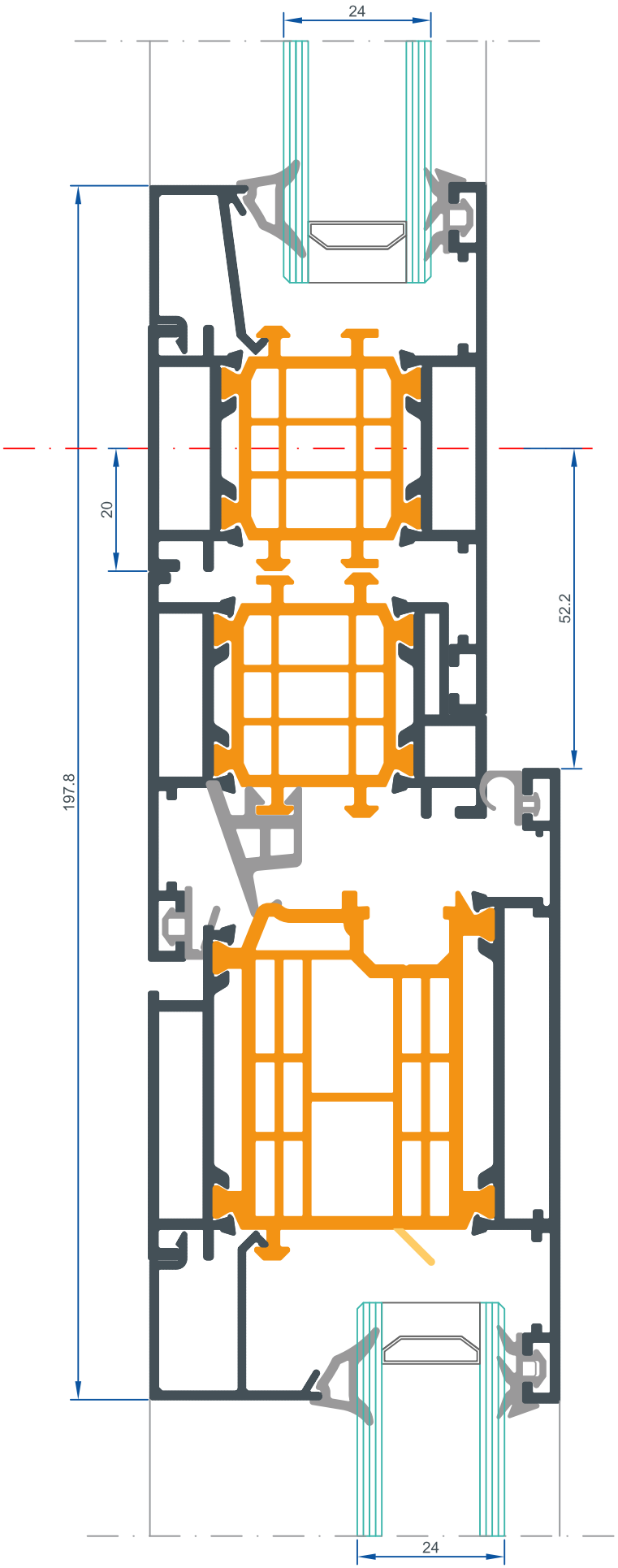

# 55 HIBRIT

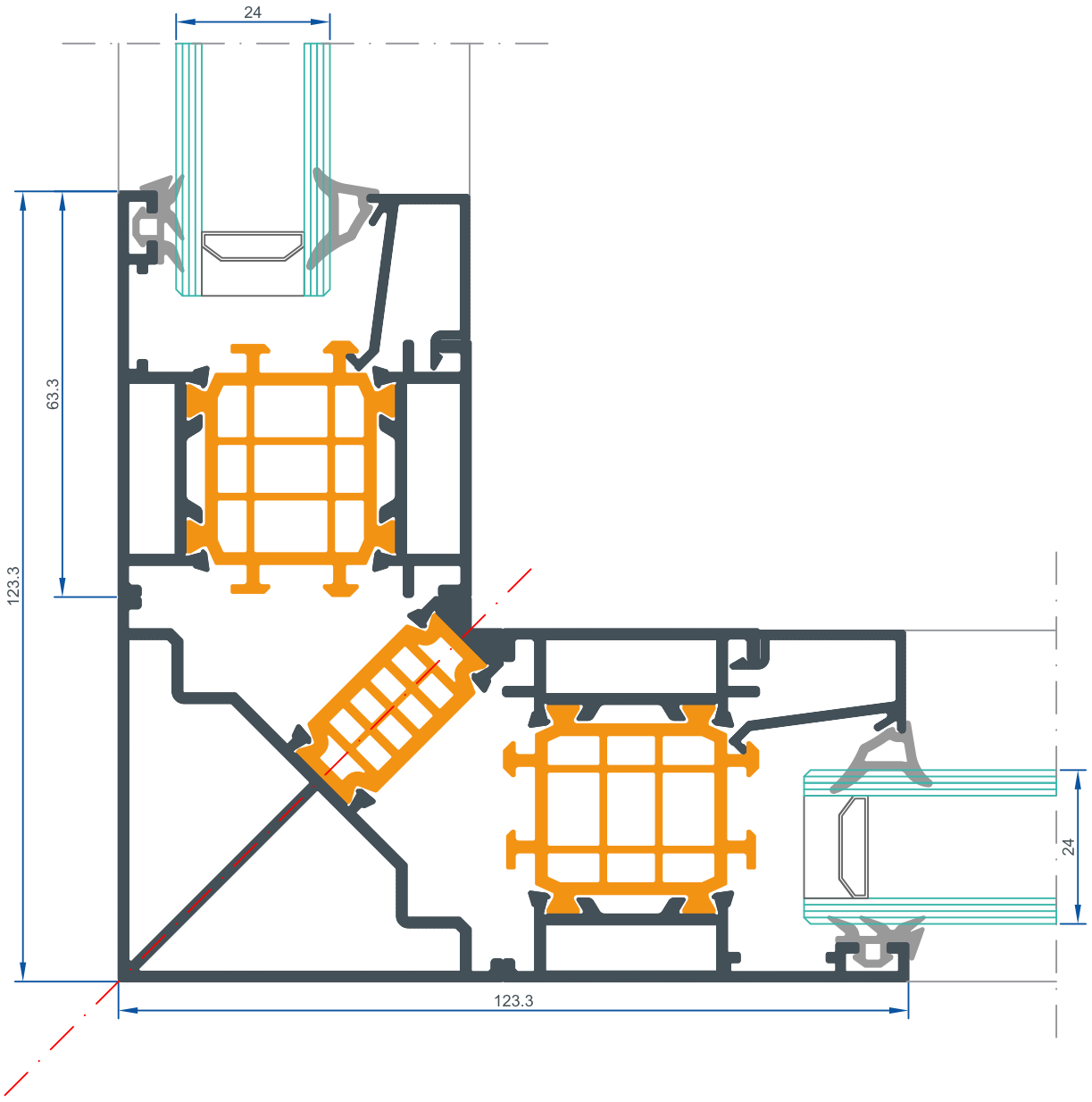

# 55 HIBRIT

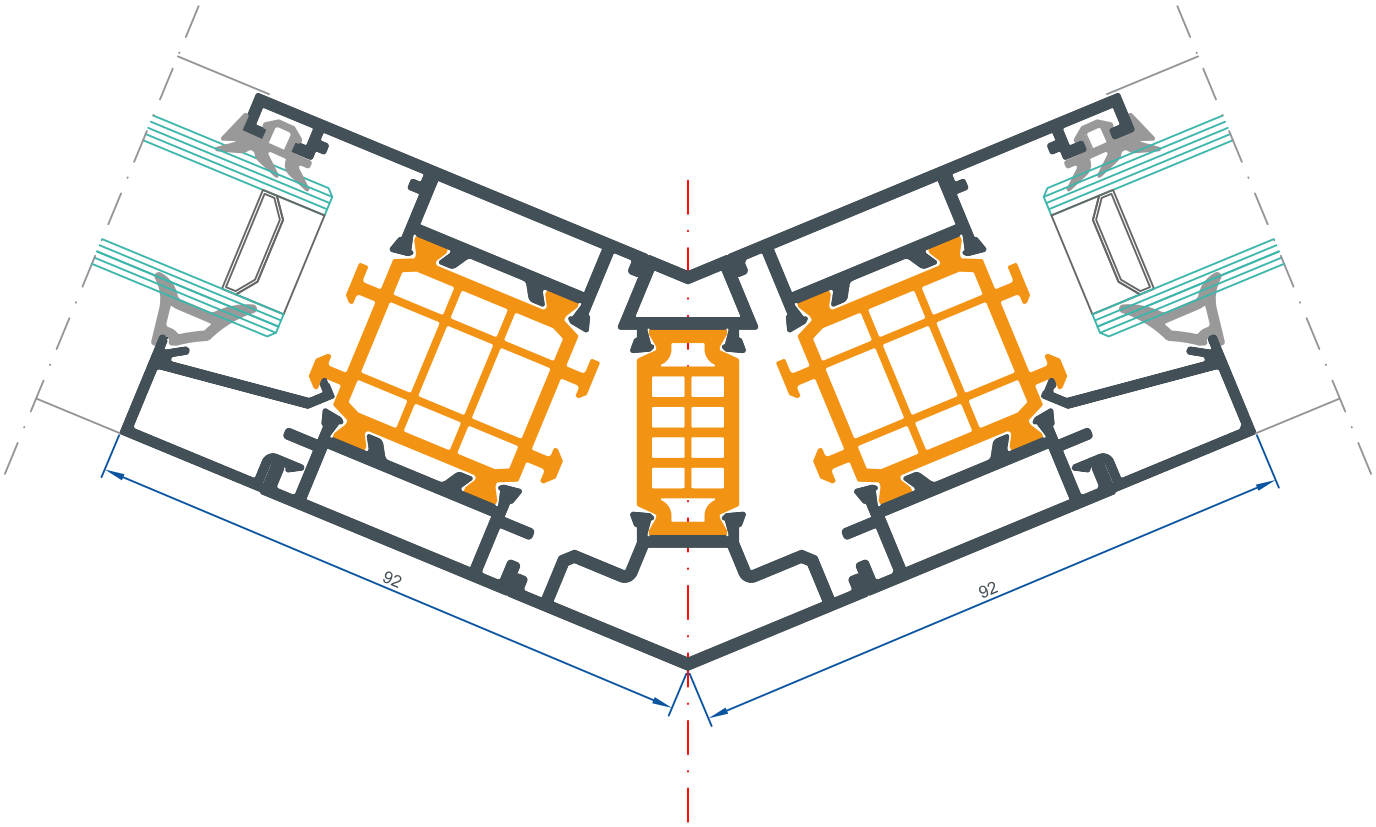

# 55 HIBRIT

FTL.01.01
İÇ CAM FİTİLİ
GLAZING GASKET (INSIDE)
Malzeme / Material : EPDM



FTL.02.01
DIŞ CAM FİTİLİ
GLAZING GASKET (OUTSIDE)
Malzeme / Material : EPDM



FTL.06.01
TOZLUK FİTİLİ
CENTRAL GASKET
Malzeme / Material : EPDM



FTL.01.02
İÇ CAM FİTİLİ
GLAZING GASKET (INSIDE)
Malzeme / Material : EPDM



FTL.03.01
İÇ BİNİ FİTİLİ
ACOUSTICAL GASKET
Malzeme / Material : EPDM



FTL.01.03
İÇ CAM FİTİLİ
GLAZING GASKET (INSIDE)
Malzeme / Material : EPDM



FTL.04.01
BİNİ FİTİLİ
ACOUSTICAL GASKET
Malzeme / Material : EPDM



FTL.01.04
İÇ CAM FİTİLİ
GLAZING GASKET (INSIDE)
Malzeme / Material : EPDM



FTL.05.01
ADAPTÖR FİTİLİ
ADAPTER GASKET
Malzeme / Material : EPDM





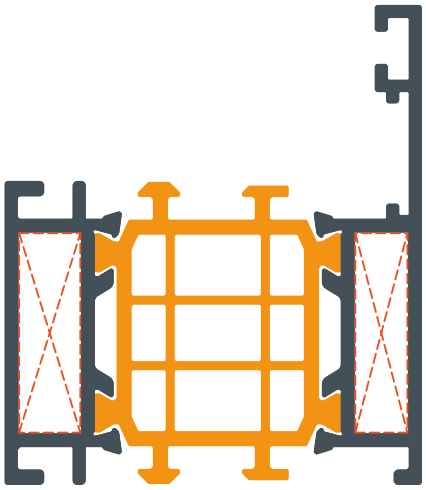

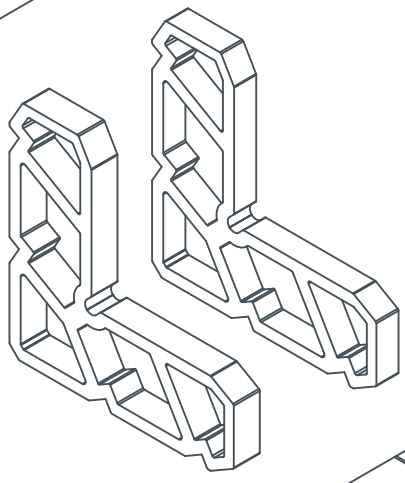

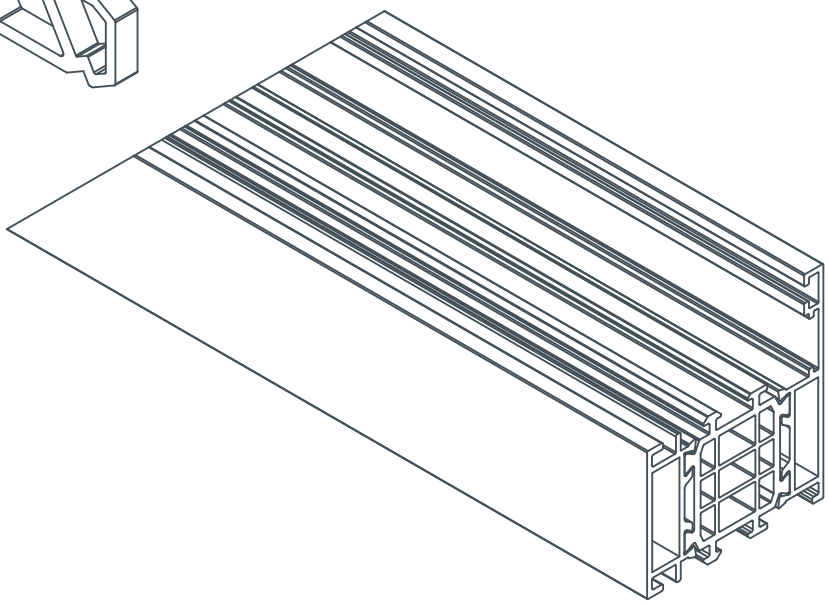

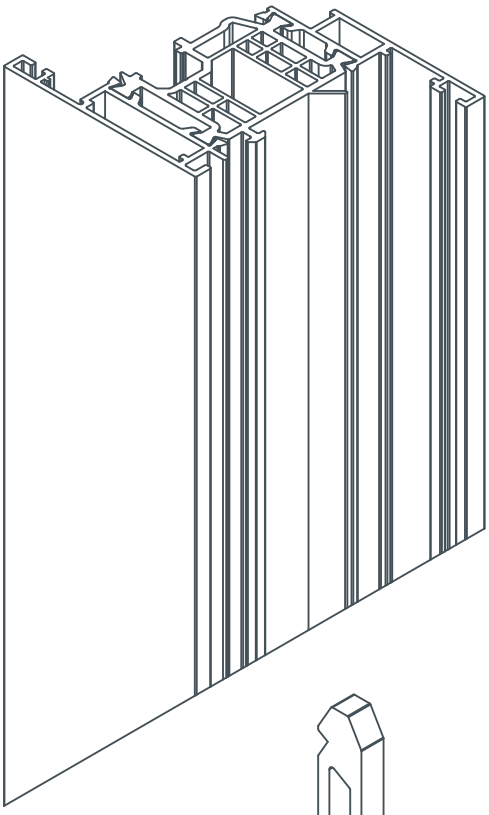

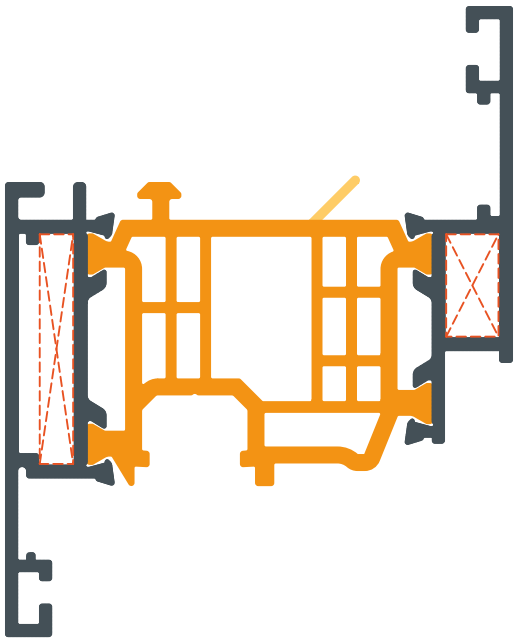

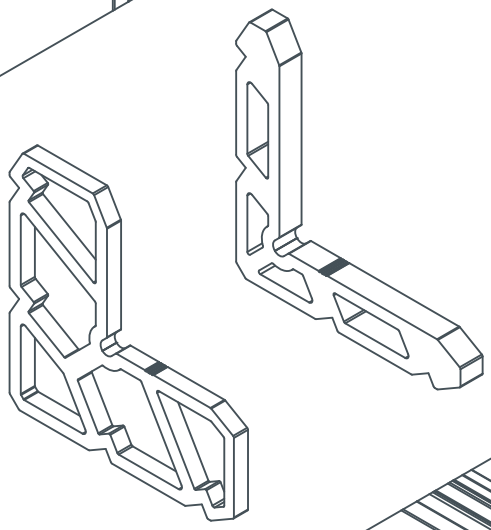

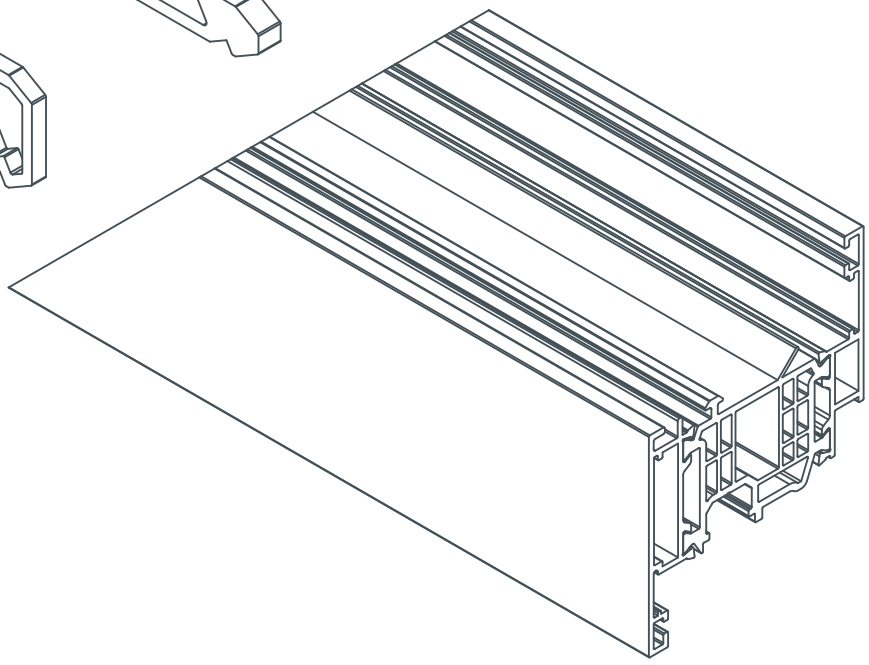

# 55 HIBRIT



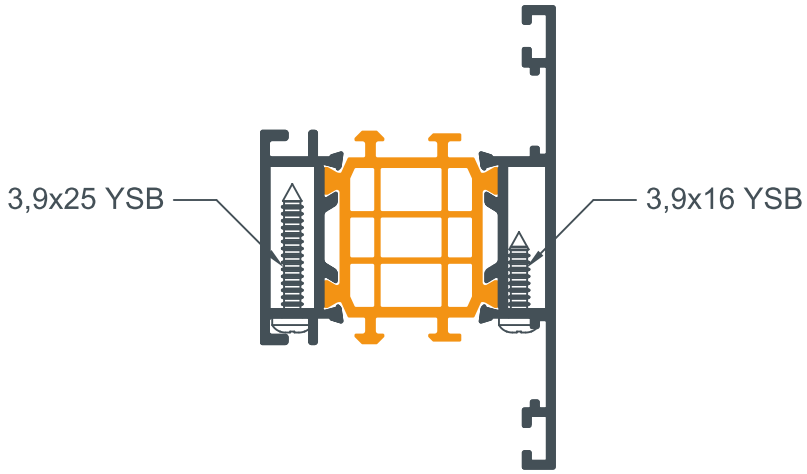


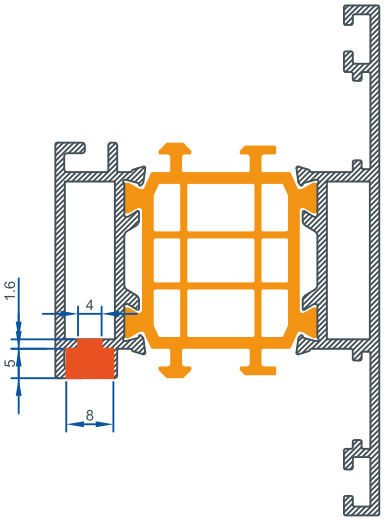


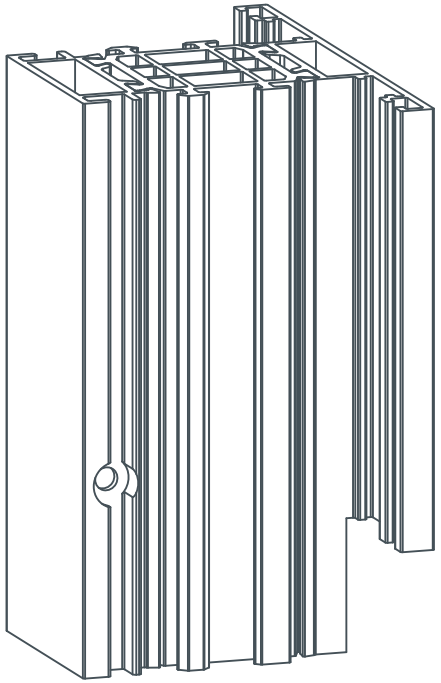

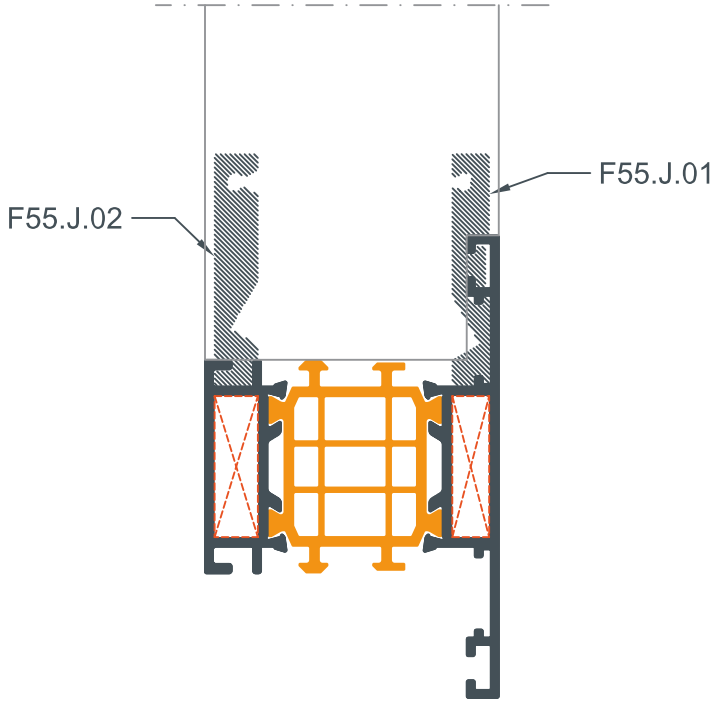


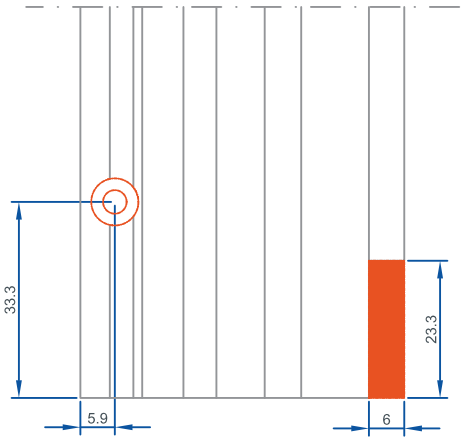

# 55 HIBRIT

## MONTAJ
## ASSEMBLY

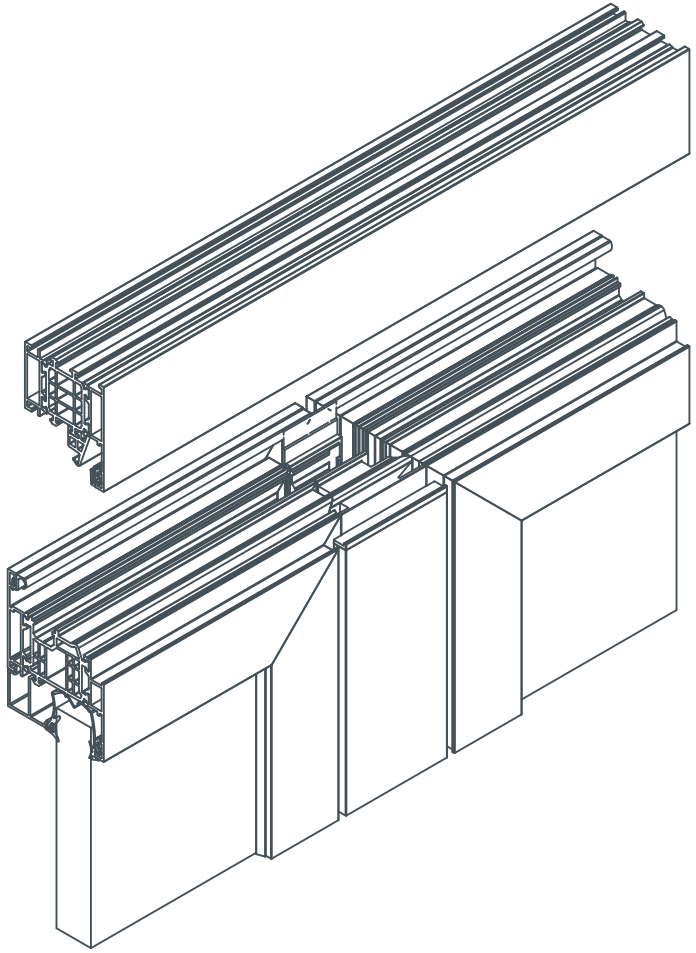

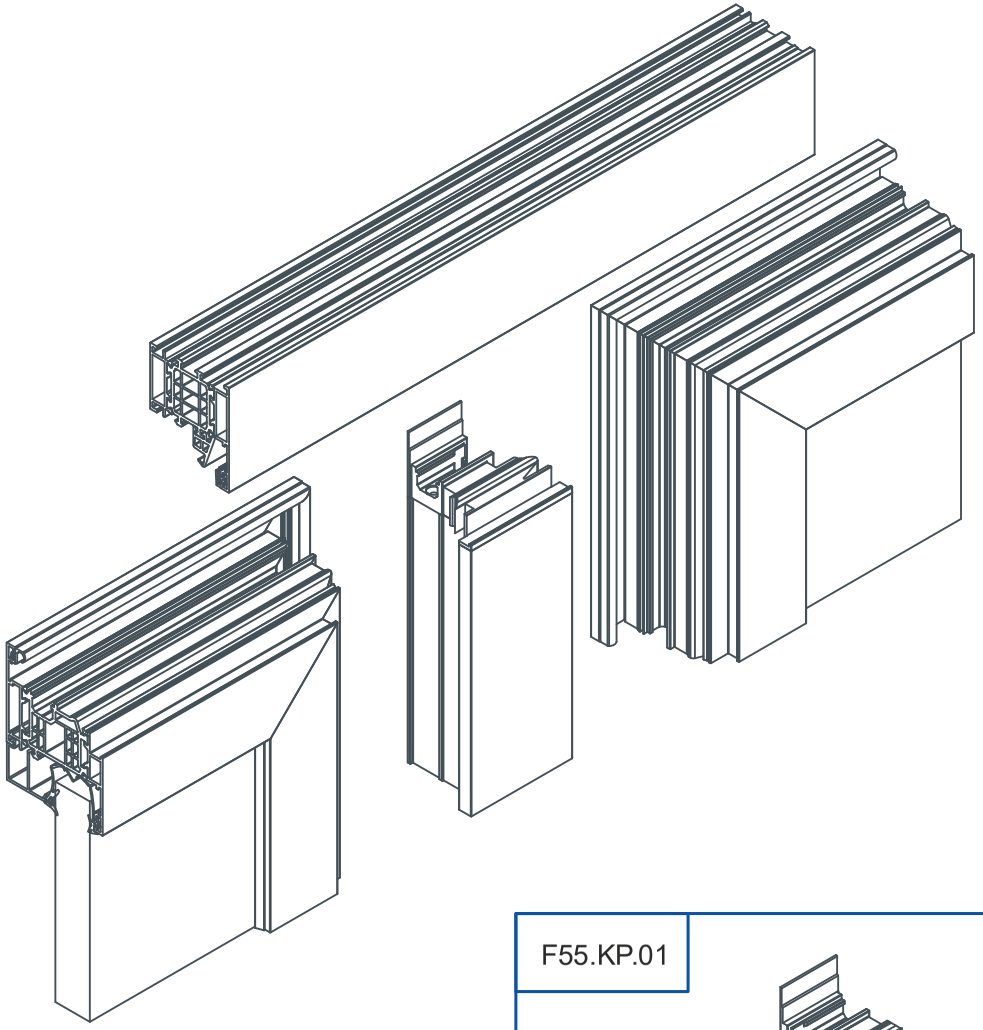

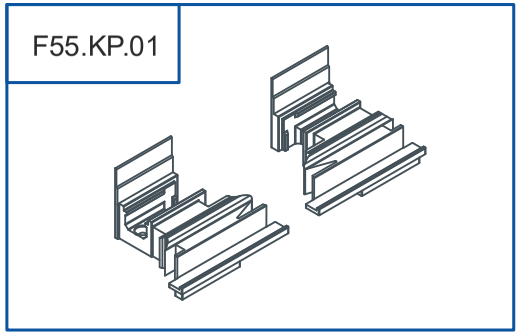

# 55 HIBRIT

MONTAJ
ASSEMBLY

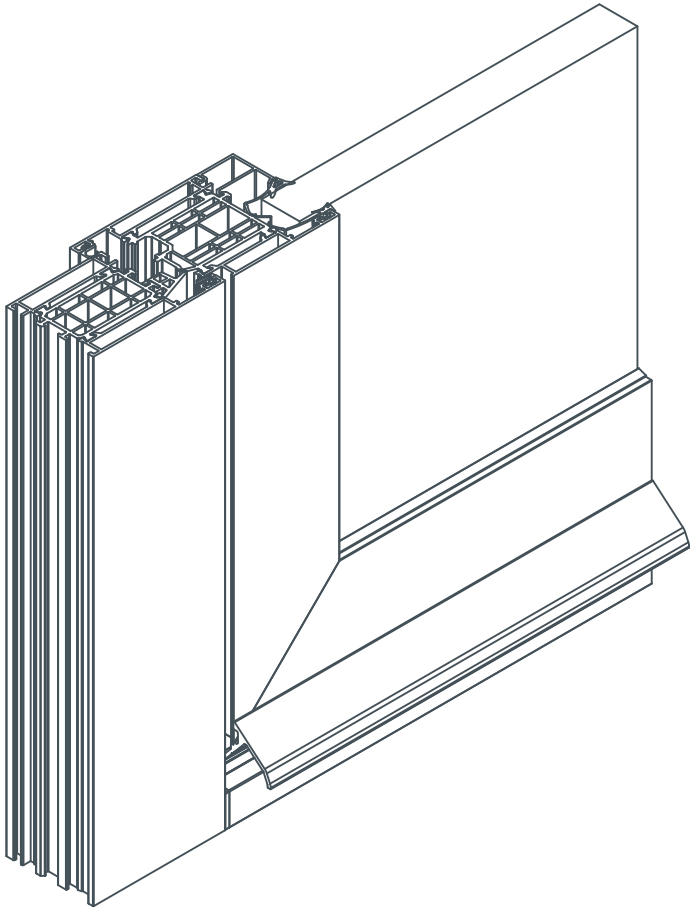

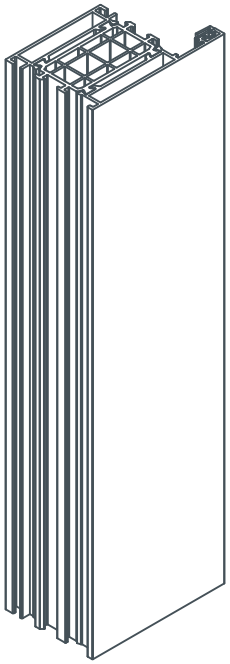

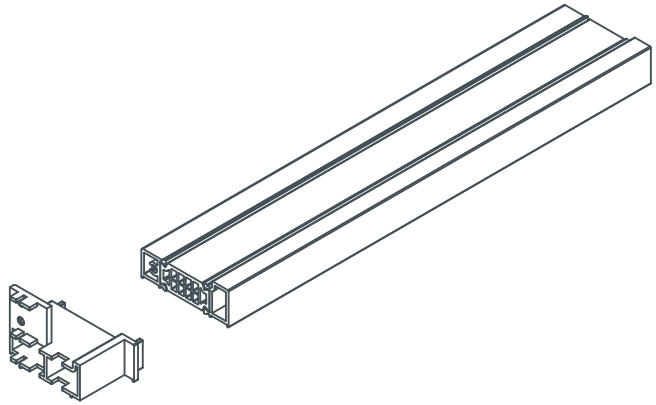

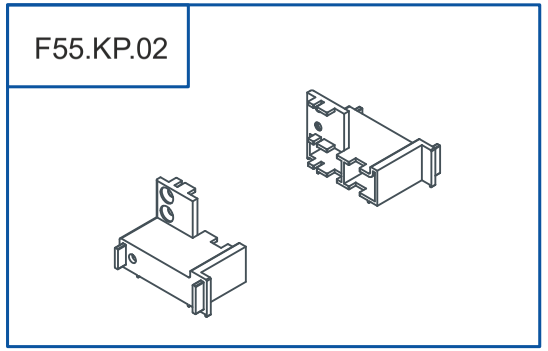

# FIRATPEN

Türkoba Mah. Fırat Plastik Cad. No: 23
34537 Büyükçekmece - İstanbul - TÜRKİYE
T: +90 212  866 41 41 - 866 42 42

MÜŞTERİ DANIŞMA HATTI / CUSTOMER SERVICE
444 9 378 (FRT) - 0 800 219 80 20

firat@firat.com - info@firat.com - export@firat.com
musterihizmetleri@firat.com
**www.firatpen.com.tr - www.firat.com**

# FIRAT

KASIM 2026